INSTRUCTION BOOKLET

AQ SAS™ Standard Arc Schemes

AQ 100 Series

Software Version: AQ110P (1.2.09), AQ101 (1.2.07)

Revision	1.0
Date	October 2010
Changes	Initial version.

Revision	1.1
Date	August 2011
Changes	Add more information and scheme selections.

Revision	1.2
Date	September 2011
Changes	Add more information and scheme selections

Revision	1.3
Date	November 2011
Changes	Correct the information

Revision	1.4
Date	August 2012
Changes	Correct the information.

Revision	1.5
Date	August 2017
Changes	Add new schemes and layouts.

Revision	1.6
Date	August 2020
Changes	Revise AQ101S connection diagrams

Read these instructions carefully and inspect the equipment to become familiar with it before trying to install, operate, service or maintain it.

Electrical equipment should be installed, operated, serviced, and maintained only by qualified personnel. Local safety regulations should be followed. No responsibility is assumed by Arcteq for any consequences arising out of the use of this material.

We reserve right to changes without further notice.

Table of Contents

1. ABBREVIATIONS 5
2. ONE INCOMER WITH TIE BREAKER 6
   2.1. ONE INCOMER WITHOUT TIE BREAKER (AQ101-SS1) 6
      2.1.1. SCHEME CHARACTERISTICS 6
      2.1.2. TRIP AND I/O DESCRIPTION 8
      2.1.3. CONNECTIONS 12
   2.2. ONE INCOMER WITHOUT TIE BREAKER (AQ101-SS4) 14
      2.2.1. SCHEME CHARACTERISTICS 14
      2.2.2. TRIP AND I/O DESCRIPTION 16
      2.2.3. CONNECTIONS 19
   2.3. ONE INCOMER WITHOUT TIE BREAKER (AQ101-SS6) 21
      2.3.1. SCHEME CHARACTERISTICS 21
      2.3.2. TRIP AND I/O DESCRIPTION 23
      2.3.3. CONNECTIONS 26
2. TWO INCOMERS WITHOUT TIE BREAKER 28
   2.1. TWO INCOMERS WITHOUT TIE BREAKER (AQ110P-SS4A) 28
      2.1.1. SCHEME CHARACTERISTICS 28
      2.1.2. TRIP AND I/O DESCRIPTION 30
      2.1.3. CONNECTIONS 36
3. TWO INCOMERS WITH TIE BREAKER 39
   3.1. TWO INCOMERS WITH TIE BREAKER (AQ101-SS1) 39
      3.1.1. SCHEME CHARACTERISTICS 39
      3.1.2. I/O DESCRIPTION 41
      3.1.3. CONNECTIONS 44
   3.2. TWO INCOMER S WITH TIE BREAKER (AQ101-SS4) 46
      3.2.1. SCHEME CHARACTERISTICS 46
      3.2.2. TRIP AND I/O DESCRIPTION 48
      3.2.3. CONNECTIONS 51
   3.3. TWO INCOMERS WITH TIE BREAKER (AQ101-SS0) 53
      3.3.1. SCHEME CHARACTERISTICS 53
      3.3.2. I/O DESCRIPTION 55
      3.3.3. CONNECTIONS 58
   3.4. TWO INCOMER S WITH TIE BREAKER (AQ101S-SS12, AQ101S-SS5) 60
      3.4.1. SCHEME CHARACTERISTICS 60
      3.4.2. TRIP AND I/O DESCRIPTION 62
      3.4.3. CONNECTIONS 67

4. STANDALONE 72
4.1. ONE INCOMER (STANDALONE SCHEME 6A) 72
4.1.1. SCHEME CHARACTERISTICS 72
4.1.2. I/O DESCRIPTION 74
4.1.3. CONNECTIONS 77
4.1.4. SENSOR IN USE 78
5. MULTI INCOMERS WITHOUT BREAKER 79
5.1. MULTI INCOMERS WITHOUT TIE BREAKER (AQ110P-SS4A) 79
5.1.1. SCHEME CHARACTERISTICS 79
5.1.2. I/O DESCRIPTION 81
5.1.3. CONNECTIONS 86
6. MULTI INCOMERS WITH TIE BREAKER 89
6.1. MULTI INCOMERS WITH TIE BREAKER 89
6.1.1. SCHEME CHARACTERISTICS 89
6.1.2. I/O DESCRIPTION 91
6.1.3. CONNECTIONS 101
7. MULTI SECTIONS SCHEMES 104
7.1. MULTI SECTIONS SCHEMES – SINGLE INCOMER PER SECTION 104
7.1.1. SCHEME CHARACTERISTICS 104
7.1.2. I/O DESCRIPTION 106
7.1.3. CONNECTIONS 111
8. DOUBLE BUSBAR 114
8.1. TWO INCOMERS WITH BUS SECTION & BUS COUPLER (DOUBLE BUSBAR) 114
8.1.1. SCHEME CHARACTERISTICS 114
8.1.2. TRIP AND I/O DESCRIPTION 116
8.1.3. CONNECTIONS 131
8.2. TWO INCOMERS WITH BUS COUPLER ONLY (DOUBLE BUSBAR) 139
8.2.1. SCHEME CHARACTERISTICS 139
8.2.2. TRIP AND I/O DESCRIPTION 141
8.2.3. CONNECTIONS 156

1. ABBREVIATIONS

CC – Cable compartment

CB – Circuit Breaker

BB – Busbar

VT – Voltage Transformer

BC – Bus Coupler

BS – Bus Section

I> (int.) – Internal overcurrent I> (activated by internal overcurrent module from IL1, IL2, IL3 or Io pick-up)

I> (ext.) – External overcurrent I> (activated from external binary input(s))

2. One Incomer with Tie Breaker

2.1. One Incomer Without Tie Breaker (AQ101-SS1)

2.1.1. Scheme characteristics

Scheme Selection Number	AQ110P – SS1a; AQ101 – SS1
Number of Incoming Feeders	1 x incoming feeder
Number of Outgoing Feeders	M x outgoing feeders
Number of the Circuit Breakers	1 x incomer CBs; M x outgoing CBs
Selective Trip for Incoming Feeder CBs	YES
Selective Trip for Outgoing Feeder CBs	YES
Master Trip Function	YES
Units Applied	1 x AQ110P; M x AQ101

M: 1 to 20.

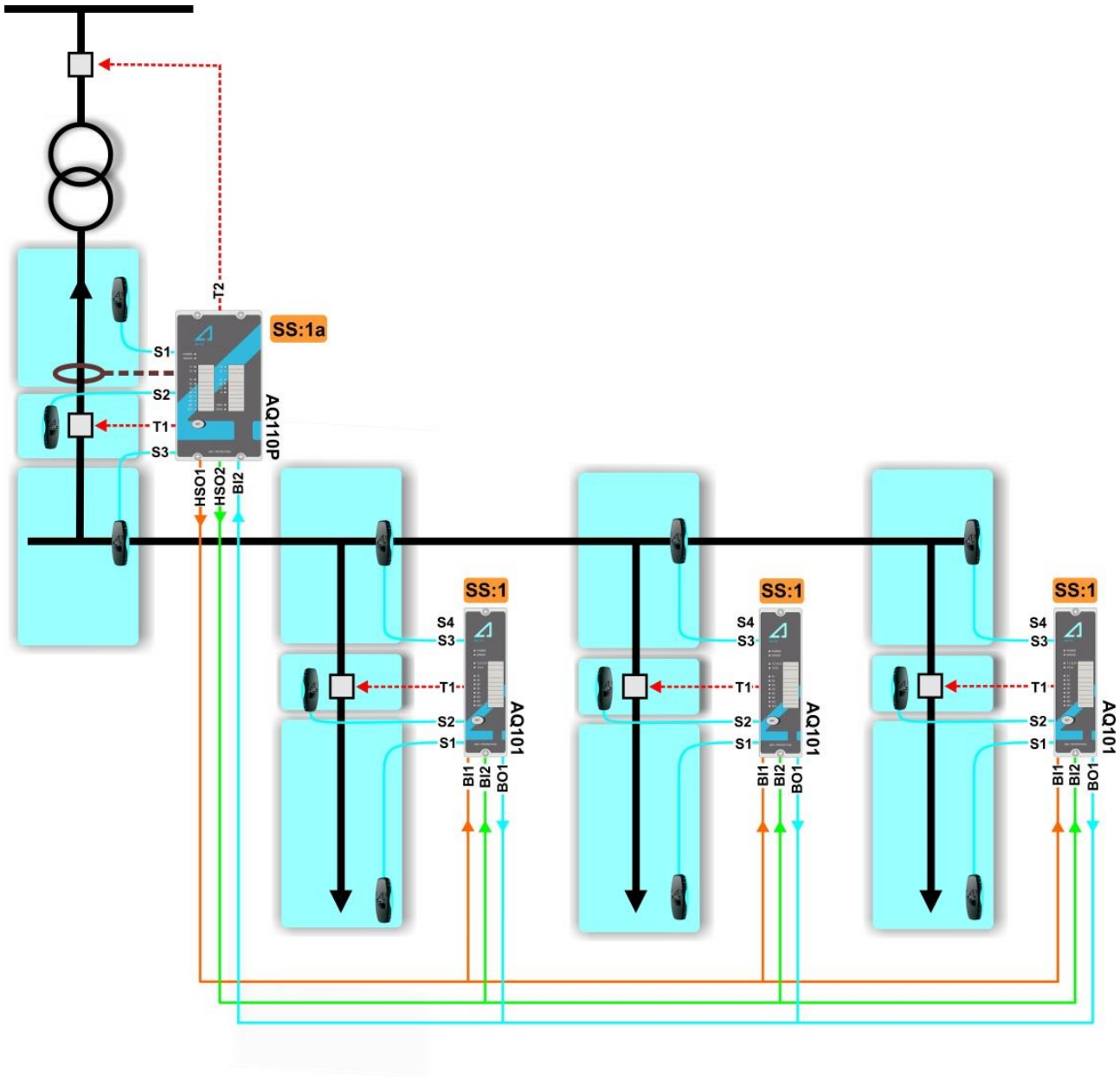

Figure 2-1 One Incomer without Tie Breaker (AQ101-SS1)

2.1.2. Trip and I/O Description

AQ110P – SS1a:

L>	I> (int.)	I/O Description	Trip Description
	IL, Io	✓ Current inputs Phase IL1, IL2, IL3 and E/F Io. ✓ Measuring current for incomer(s).	✓ Signal outputs: HSO1 (I>) to outgoing units AQ101-SS1 input BI1.
S1		✓ Sensor channel 1. ✓ Monitoring incoming cable compartment.	✓ Trip criteria: L> only. ✓ Trip outputs: T1 (incomer CB), T2 (upstream CB (HV side)), T4 (trip alarm).
S2	IL, Io	✓ Sensor channel 2. ✓ Monitoring incoming circuit breaker compartment.	✓ Trip criteria: I> + L>. ✓ Trip outputs: T1 (incomer CB), T2 (upstream CB (HV side)), T3 (not in use), T4 (trip alarm). ✓ Signal outputs: HSO2 (MT) to outgoing units AQ101-SS1 input BI2.
S3/S4	IL, Io	✓ Sensor channel 3/4. ✓ Monitoring busbar compartment.	✓ Trip criteria: I> + L>. ✓ Trip outputs: T1 (incomer CB), T3 (not in use), T4 (trip alarm). ✓ Signal outputs: HSO2 (MT) to outgoing units AQ101-SS1 input BI2.
BI2	IL, Io	✓ Binary input 2.	✓ Trip criteria: I> + L> ✓ Trip outputs: T1 (incomer CB), T3 (not in use), T4 (trip alarm). ✓ Signal outputs: HSO2 (MT) to outgoing unit AQ101-SS1 input BI2. ✓ Signal inputs: L> from outgoing units AQ101-SS1 output BO1.

Table 2-1: Trip and I/O Description - AQ110P SS1a

Inputs		Outputs						
L>	**I> (int.)**	**T1**	**T2**	**T3**	**T4**	**HSO1 (I>)**	**HSO2 (MT)**	**BO1**
	IL, Io					√		
S1		√	√		√			
S2	IL, Io	√	√	√	√	√	√	
S3	IL, Io	√		√	√	√	√	
S4	IL, Io	√		√	√	√	√	
BI2	IL, Io	√		√	√	√	√	

Table 2-2: Trip and I/O logic - AQ110P SS1a

AQ101-SS1:

L>	I> (ext.)	I/O Description	Trip Description
	BI1	✓ Binary input 1.	✓ Signal inputs: BI1 (I>) from incomer unit AQ110P-SS1a output HSO1.
S1	BI1	✓ Sensor channel 1. ✓ Monitoring outgoing cable compartment.	✓ Trip criteria: I> + L>. ✓ Trip outputs: T1 (outgoing CB), T3 (not in use), T4 (trip alarm). ✓ Signal outputs: BO1 (L>) to incomer unit AQ110P-SS1a BI2 after CBFP setting time.
S2	BI1	✓ Sensor channel 2. ✓ Monitoring outgoing circuit breaker compartment.	✓ Trip criteria: I> + L>. ✓ Trip outputs: T2 (CBFP), T4 (CBFP). ✓ Signal outputs: BO1 (L>) to incomer unit AQ110P-SS1a input BI2. ✓ Signal inputs: BI2 (MT) from incomer unit AQ110P-SS1a output HSO2.
S3/S4	BI1	✓ Sensor channel 3/4. ✓ Monitoring busbar compartment.	✓ Trip criteria: I> + L>. ✓ Trip outputs: T2 (CBFP), T4 (CBFP). ✓ Signal outputs: BO1 (L>) to incomer unit AQ110P-SS1a input BI2. ✓ Signal inputs: BI2 (MT) from incomer unit AQ110P-SS1a output HSO2.
BI2		✓ Binary input 2.	✓ Trip criteria: I> + L> ✓ Trip outputs: T1 (outgoing CB), T2 (not in use), T3 (not in use), T4 (trip alarm). ✓ Signal inputs: BI2 (MT) from incomer unit AQ110P-SS1a output HSO2.

Table 2-3: Trip and I/O Description - AQ101 SS1

Inputs		Outputs				
L>	**I> (ext.)**	**T1**	**T2**	**T3**	**T4**	**BO1**
	BI1					
S1	BI1	√	√(CBFP)	√	√	√(CBFP)
S2	BI1		√(CBFP)		√(CBFP)	√
S3	BI1		√(CBFP)		√(CBFP)	√
S4	BI1		√(CBFP)		√(CBFP)	√
BI2		√(MT)	√(CBFP)	√(MT)	√(MT)	

Table 2-4: Trip and I/O Logic - AQ101-SS1

2.1.3. CONNECTIONS

AQ110P-SS1A:

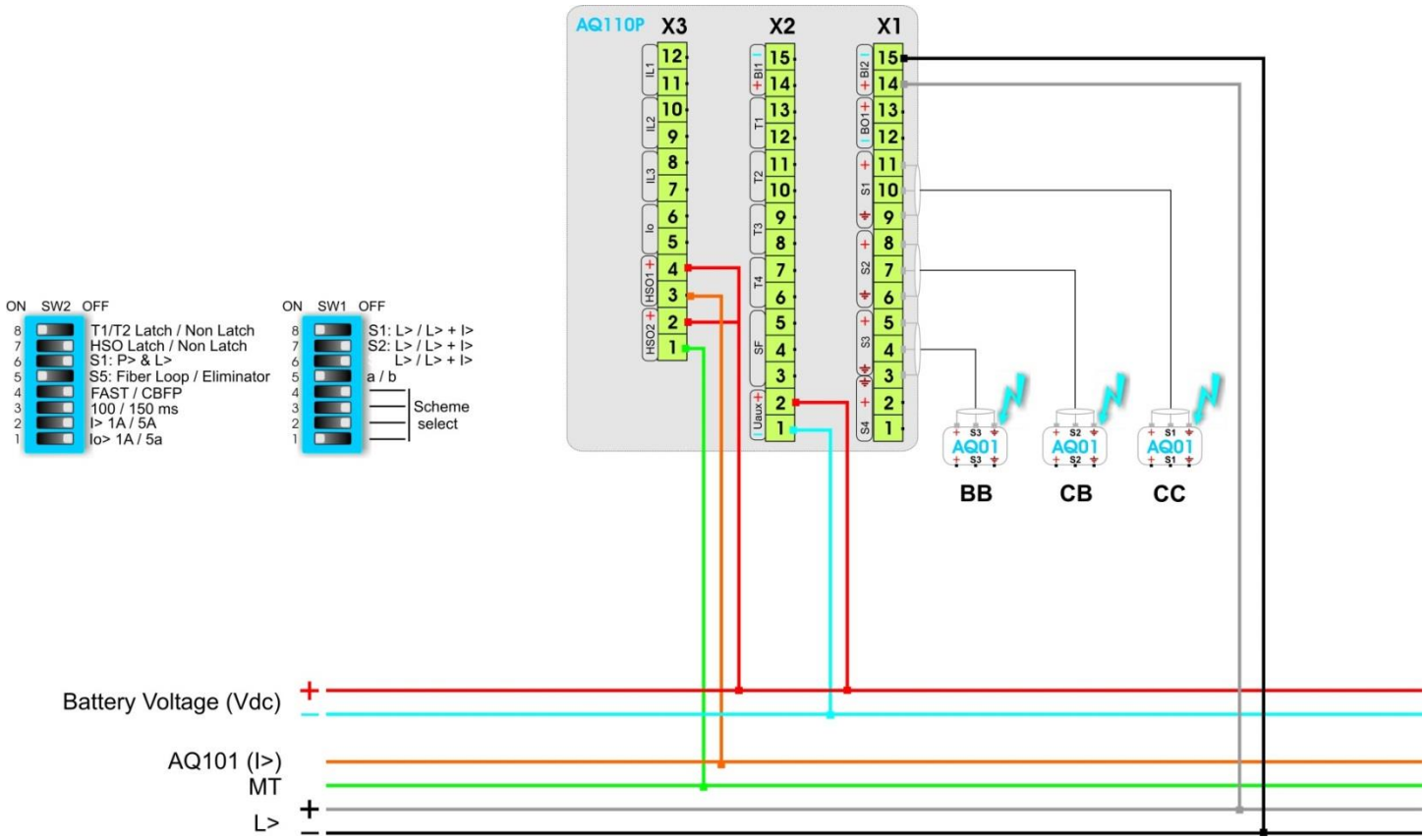

AQ101-SS1:

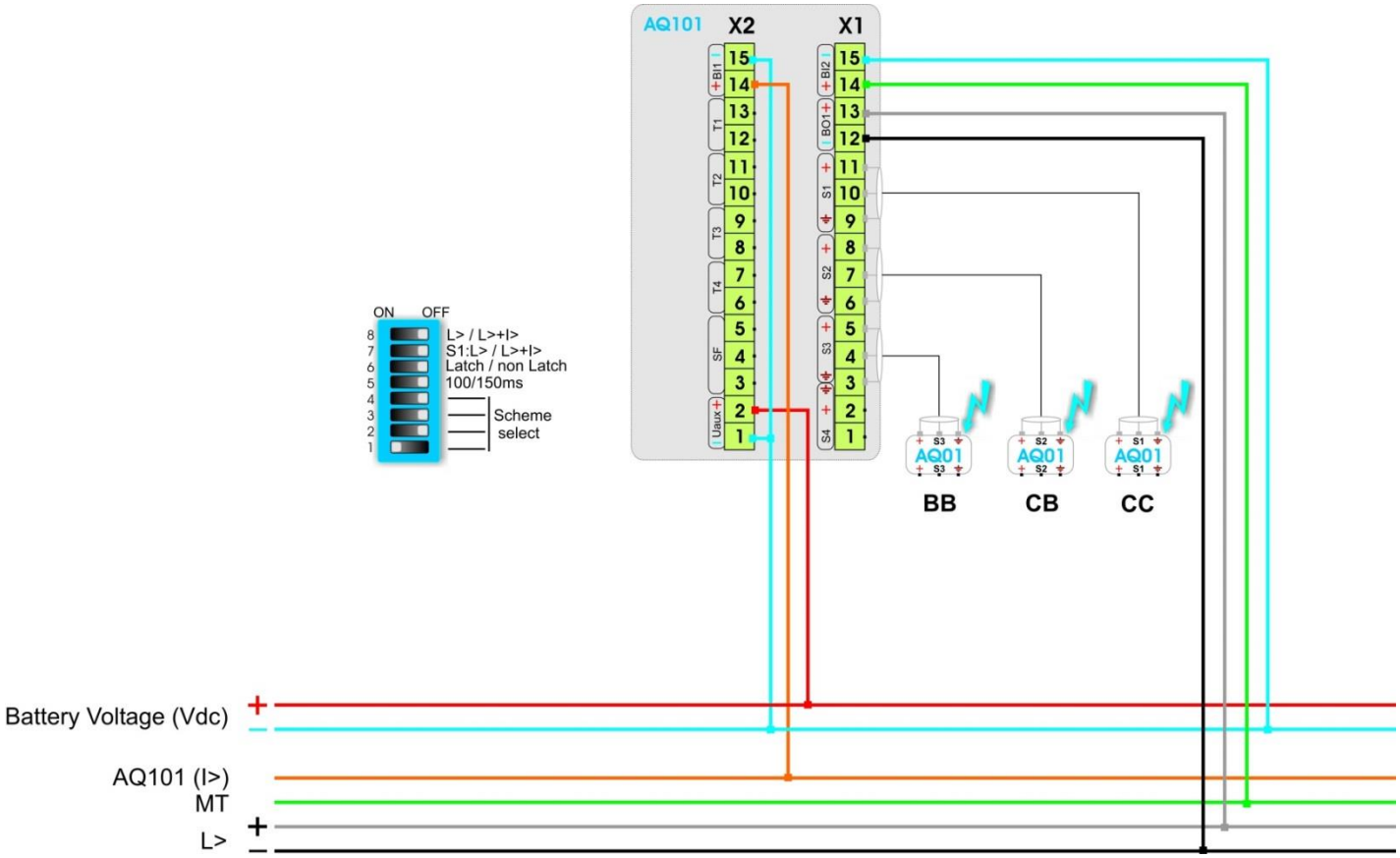
AQ101
X2
X1
ON
OFF
L> / L>+I>
S1:L> / L>+I>
Latch / non Latch
100/150ms
Scheme
select
AQ01
BB
CB
CC
Battery Voltage (Vdc)
AQ101 (I>)
MT
L>

2.2. One Incomer Without Tie Breaker (AQ101-SS4)

2.2.1. Scheme characteristics

Scheme Selection Number	AQ110P – SS1a; AQ101 – SS4
Number of Incoming Feeders	1 x incoming feeder
Number of Outgoing Feeders	M x outgoing feeders
Number of the Circuit Breakers	1 x incomer CBs; M x outgoing CBs
Selective Trip for Incoming Feeder CBs	YES
Selective Trip for Outgoing Feeder CBs	YES
Master Trip Function	YES
Units Applied	1 x AQ110P; M x AQ101

M: 1 to 20.

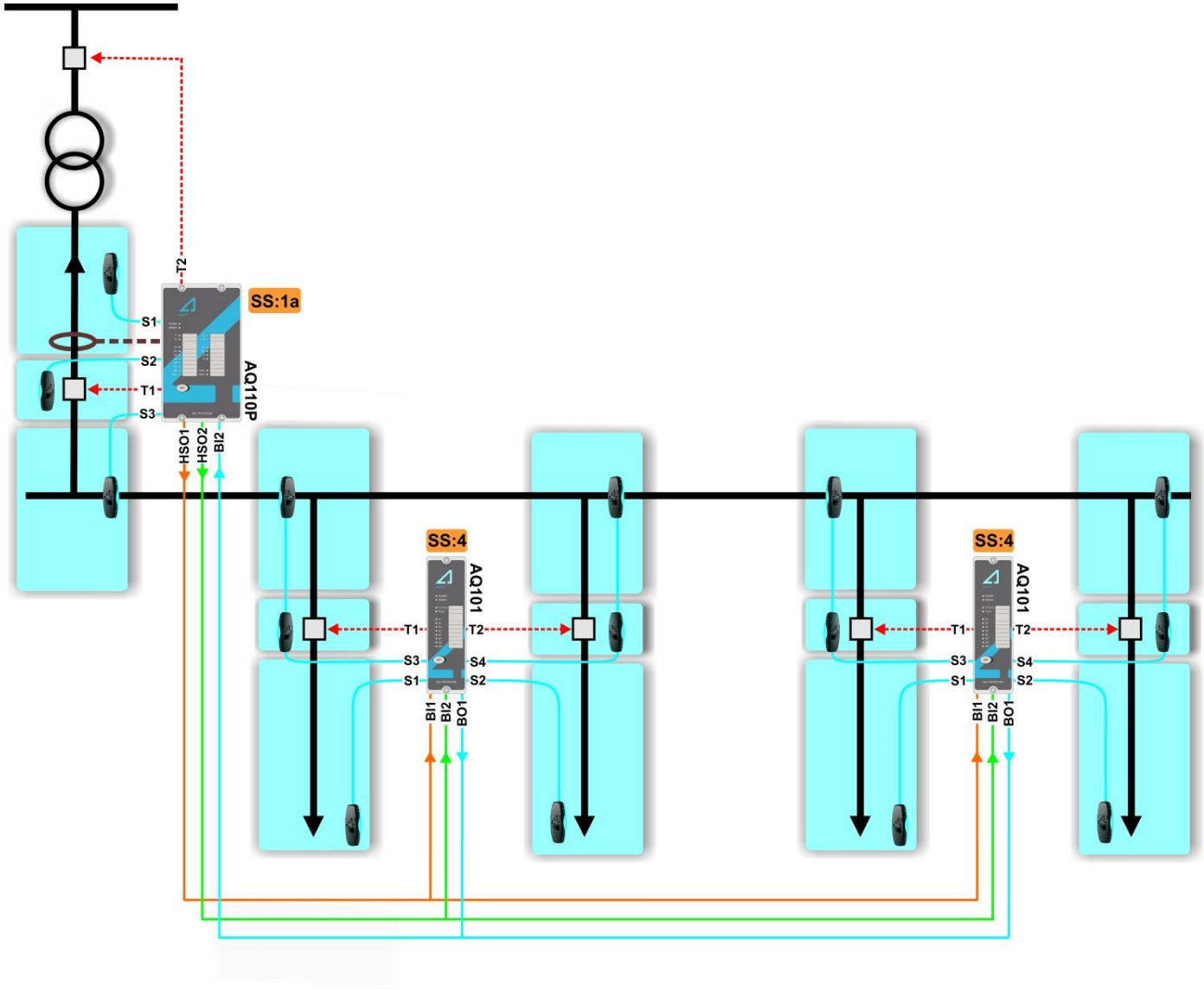

Figure 2-2 One Incomer without Tie Breaker (AQ101-SS4)

2.2.2. Trip and I/O Description

AQ110P – SS1a:

L>	I> (int.)	I/O Description	Trip Description
	IL, Io	✓ Current inputs Phase IL1, IL2, IL3 and E/F Io. ✓ Measuring current for incomer(s).	✓ Signal sends: HSO1 (I>) to outgoing units AQ101-SS4 input BI1.
S1		✓ Sensor channel 1. ✓ Monitoring incoming cable compartment.	✓ Trip criteria: L> only. ✓ Trip outputs: T1 (incomer CB), T2 (upstream CB (HV side)), T4 (trip alarm).
S2	IL, Io	✓ Sensor channel 2. ✓ Monitoring incoming circuit breaker compartment.	✓ Trip criteria: I> + L>. ✓ Trip outputs: T1 (incomer CB), T2 (upstream CB (HV side)), T3 (not in use), T4 (trip alarm). ✓ Signal outputs: HSO2 (MT) to outgoing units AQ101-SS4 input BI2.
S3/S4	IL, Io	✓ Sensor channel 3/4. ✓ Monitoring busbar compartment.	✓ Trip criteria: I> + L>. ✓ Trip outputs: T1 (incomer CB), T3 (not in use), T4 (trip alarm). ✓ Signal outputs: HSO2 (MT) to outgoing units AQ101-SS4 input BI2.
BI2	IL, Io	✓ Binary input 2.	✓ Trip criteria: I> + L> ✓ Trip outputs: T1 (incomer CB), T3 (not in use), T4 (trip alarm). ✓ Signal outputs: HSO2 (MT) to outgoing unit AQ101-SS4 input BI2. ✓ Signal inputs: BI2 (L>) from outgoing units AQ101-SS4 output BO1.

Table 2-5: Trip and I/O Description - AQ110P SS1a

Inputs		Outputs						
L>	**I> (int.)**	**T1**	**T2**	**T3**	**T4**	**HSO1 (I>)**	**HSO2 (MT)**	**BO1**
	IL, Io					√		
S1		√	√		√			
S2	IL, Io	√	√	√	√	√	√	
S3	IL, Io	√		√	√	√	√	
S4	IL, Io	√		√	√	√	√	
BI2	IL, Io	√		√	√	√	√	

Table 2-6: Trip and I/O logic - AQ110P SS1a

AQ101 – SS4:

L>	I> (ext.)	I/O Description	Trip Description
	BI1	✓ Binary input 1.	✓ Signal inputs: BI1 (I>) from incomer feeder AQ110P-SS1a HSO1.
S1	BI1	✓ Sensor channel 1. ✓ Monitoring outgoing cable compartment	✓ Trip criteria: I> + L>. ✓ Trip outputs: T1 (outgoing CB), T3 (not in use), T4 (Trip alarm). ✓ Signal outputs: BO1 (L>) to incomer unit AQ110P-SS1a after CBFP setting time.
S2	BI1	✓ Sensor channel 2. ✓ Monitoring outgoing cable compartment	✓ Trip criteria: I> + L>. ✓ Trip outputs: T2 (outgoing CB), T3 (not in use), T4 (Trip alarm). ✓ Signal outputs: BO1 (L>) to incomer unit AQ110P-SS1a BI2 after CBFP setting time.
S3/S4	BI1	✓ Sensor channel 3 & 4. ✓ Monitoring CB and BB compartment.	✓ Trip criteria: I> + L>. ✓ Trip outputs: T3 (not in use), T4 (Trip alarm). ✓ Signal outputs: BO1 (L>) to incomer unit AQ110P-SS1a BI2. ✓ Signal inputs: BI2 (MT) from incomer unit AQ110P-SS1a (HSO2).
BI2		✓ Binary input 2.	✓ Trip criteria: I> + L>. ✓ Trip outputs: T1 (outgoing CB), T2 (outgoing CB), T3 (not in use), T4 (Trip alarm). ✓ Signal outputs: BO1 (L>) to incomer unit AQ110P-SS1a BI2. ✓ Signal inputs: BI2 (MT) from incomer unit AQ110P-SS1a (HSO2).

Table 2-7 Trip and I/O Description - AQ101 SS4

L>	I> (ext.)	T1	T2	T3	T4	BO1
	BI1					
S1	BI1	√		√(CBFP)	√	√(CBFP)
S2	BI1		√	√(CBFP)	√	√(CBFP)
S3	BI1			√	√	√
S4	BI1			√	√	√
BI2		√(MT)	√(MT)	√(MT)	√(MT)	

Table 2-8 Trip and I/O Logic - AQ101-SS4

2.2.3. CONNECTIONS

AQ110P-SS1A:

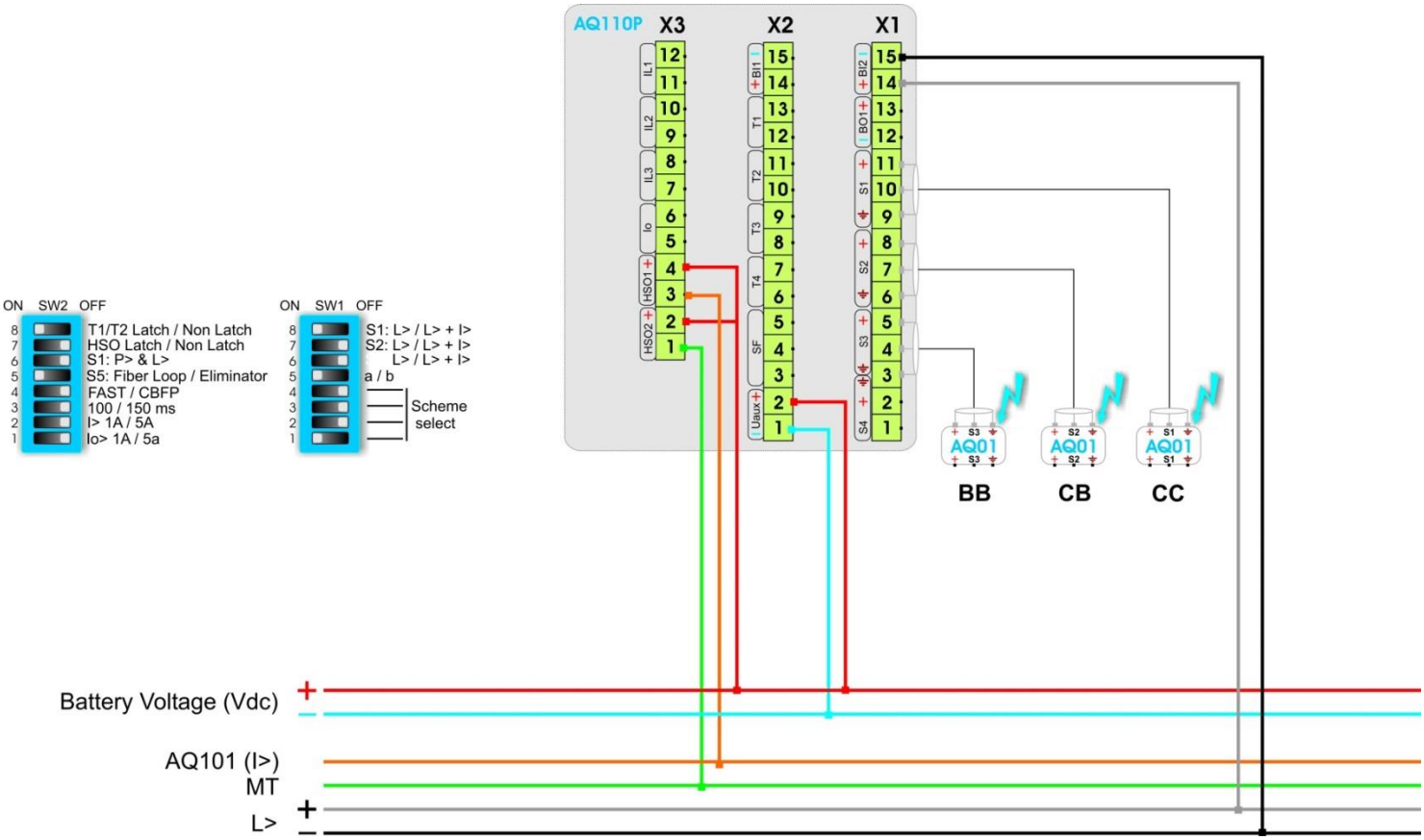

AQ101-SS4:

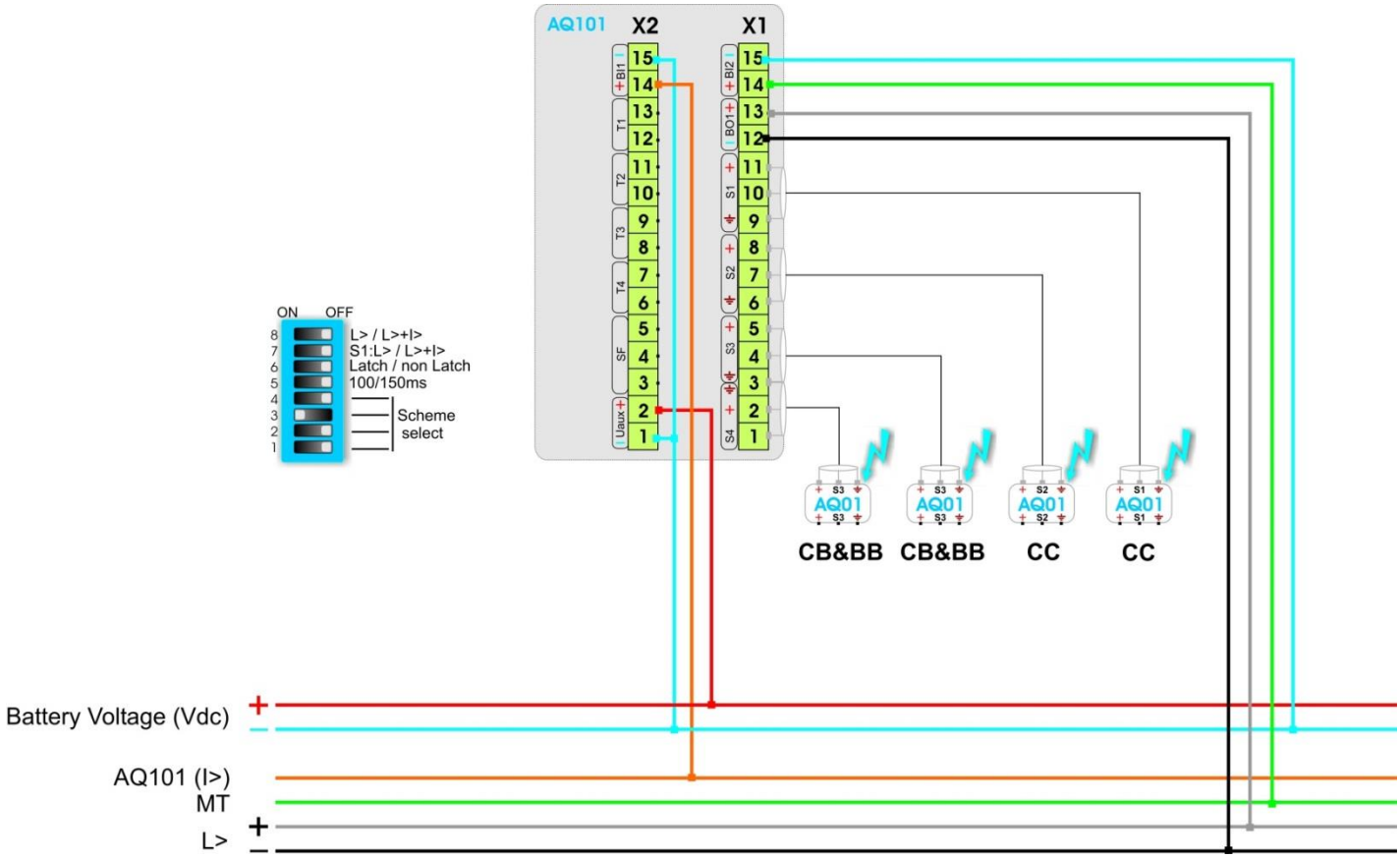
AQ101
X2
X1
ON
OFF
L> / L>+I>
S1:L> / L>+I>
Latch / non Latch
100/150ms
Scheme
select
AQ01
CB&BB
CB&BB
CC
CC
Battery Voltage (Vdc)
AQ101 (I>)
MT
L>

2.3. One Incomer Without Tie Breaker (AQ101-SS6)

2.3.1. Scheme characteristics

Scheme Selection Number	AQ110P – SS0a; AQ101 – SS6
Number of Incoming Feeders	1 x incoming feeder
Number of Outgoing Feeders	M x outgoing feeders
Number of the Circuit Breakers	1 x incomer CBs; M x outgoing CBs
Selective Trip for Incoming Feeder CBs	NO
Selective Trip for Outgoing Feeder CBs	NO
Master Trip Function	YES
Units Applied	1 x AQ110P; M x AQ101

M: 1 to 20.

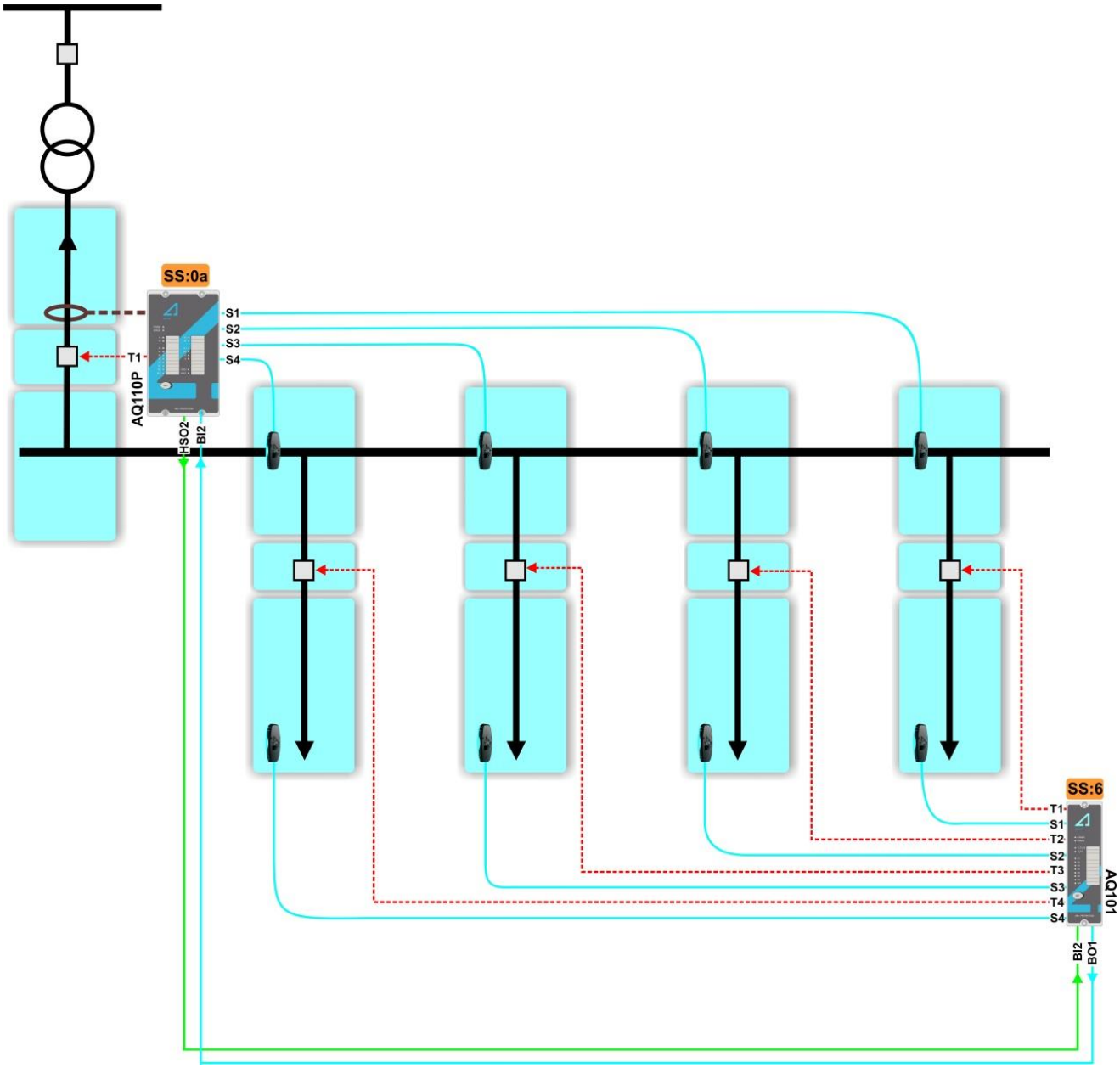

Figure 2-3 One Incomer without Tie Breaker (AQ101-SS6)

2.3.2. Trip and I/O Description

AQ110P – SS0a:

L>	I> (int.)	I/O Description	Trip Description
	IL, Io	✓ Current inputs Phase IL1, IL2, IL3 and E/F Io. ✓ Measuring current for incomer(s).	✓ Signal outputs (Not in use): HSO1 (I>) and BO1 (I>) are activated.
S1/S2 / S3/S4	IL, Io	✓ Sensor channel 1/2/3/4. ✓ Monitoring Busbar compartment.	✓ Trip criteria: L> +I>. ✓ Trip outputs: T1 (incomer CB), T2 (not in use), T3 (not in use), T4 (trip alarm). ✓ Signal outputs: HSO2 (MT) to outgoing units AQ101-SS6 input BI2.
BI2	IL, Io	✓ Binary input 2.	✓ Trip criteria: I> + L> ✓ Trip outputs: T1 (incomer CB), T3 (not in use), T4 (trip alarm). ✓ Signal outputs: HSO2 (MT) to outgoing unit AQ101-SS6 input BI2. ✓ Signal inputs: L> from outgoing units AQ101-SS6 output.

Table 2-9: Trip and I/O Description - AQ110P SS0a

Inputs		Outputs						
L>	I> (int.)	T1	T2	T3	T4	HSO1 (I>)	HSO2 (MT)	BO1
	IL, Io					√		√
S1/S2/S3/S4	IL, Io	√	√	√	√	√	√	√
BI2	IL, Io	√	√	√	√	√	√	√

Table 2-10: Trip and I/O logic - AQ110P SS0a

AQ101-SS6:

L>	I> (ext.)	I/O Description	Trip Description
	BI1	✓ Binary input 1.	✓ Signal inputs: BI1 (I>) from incomer unit AQ110P-SS0a output HSO1.
S1	BI1	✓ Sensor channel 1. ✓ Monitoring outgoing cable compartment.	✓ Trip criteria: I> + L>. ✓ Trip outputs: T1 (outgoing CB). ✓ Signal outputs: BO1 (L>) to incomer unit AQ110P-SS0a BI2 after CBFP setting time.
S2	BI1	✓ Sensor channel 2. ✓ Monitoring outgoing cable compartment.	✓ Trip criteria: I> + L>. ✓ Trip outputs: T2 (outgoing CB). ✓ Signal outputs: BO1 (L>) to incomer unit AQ110P-SS0a BI2 after CBFP setting time.
S3	BI1	✓ Sensor channel 3. ✓ Monitoring outgoing cable compartment.	✓ Trip criteria: I> + L>. ✓ Trip outputs: T3 (outgoing CB). ✓ Signal outputs: BO1 (L>) to incomer unit AQ110P-SS0a BI2 after CBFP setting time.
S4	BI1	✓ Sensor channel 4. ✓ Monitoring outgoing cable compartment.	✓ Trip criteria: I> + L>. ✓ Trip outputs: T4 (outgoing CB). ✓ Signal outputs: BO1 (L>) to incomer unit AQ110P-SS0a BI2 after CBFP setting time.
BI2		✓ Binary input 2.	✓ Trip criteria: I> + L> ✓ Trip outputs: T1 (outgoing CB), T2 (outgoing CB), T3 (outgoing CB), T4 (outgoing CB). ✓ Signal inputs: BI2 (MT) from incomer unit AQ110P-SS1a output HSO2.

Table 2-11: Trip and I/O Description - AQ101 SS6

Inputs		Outputs				
L>	**I> (ext.)**	**T1**	**T2**	**T3**	**T4**	**BO1**
	BI1					
S1	BI1	√				√(CBFP)
S2	BI1		√			√(CBFP)
S3	BI1			√		√(CBFP)
S4	BI1				√	√(CBFP)
BI2		√(MT)	√(MT)	√(MT)	√(MT)	

Table 2-12: Trip and I/O Logic - AQ101-SS6

2.3.3. CONNECTIONS

AQ110P-SS0A:

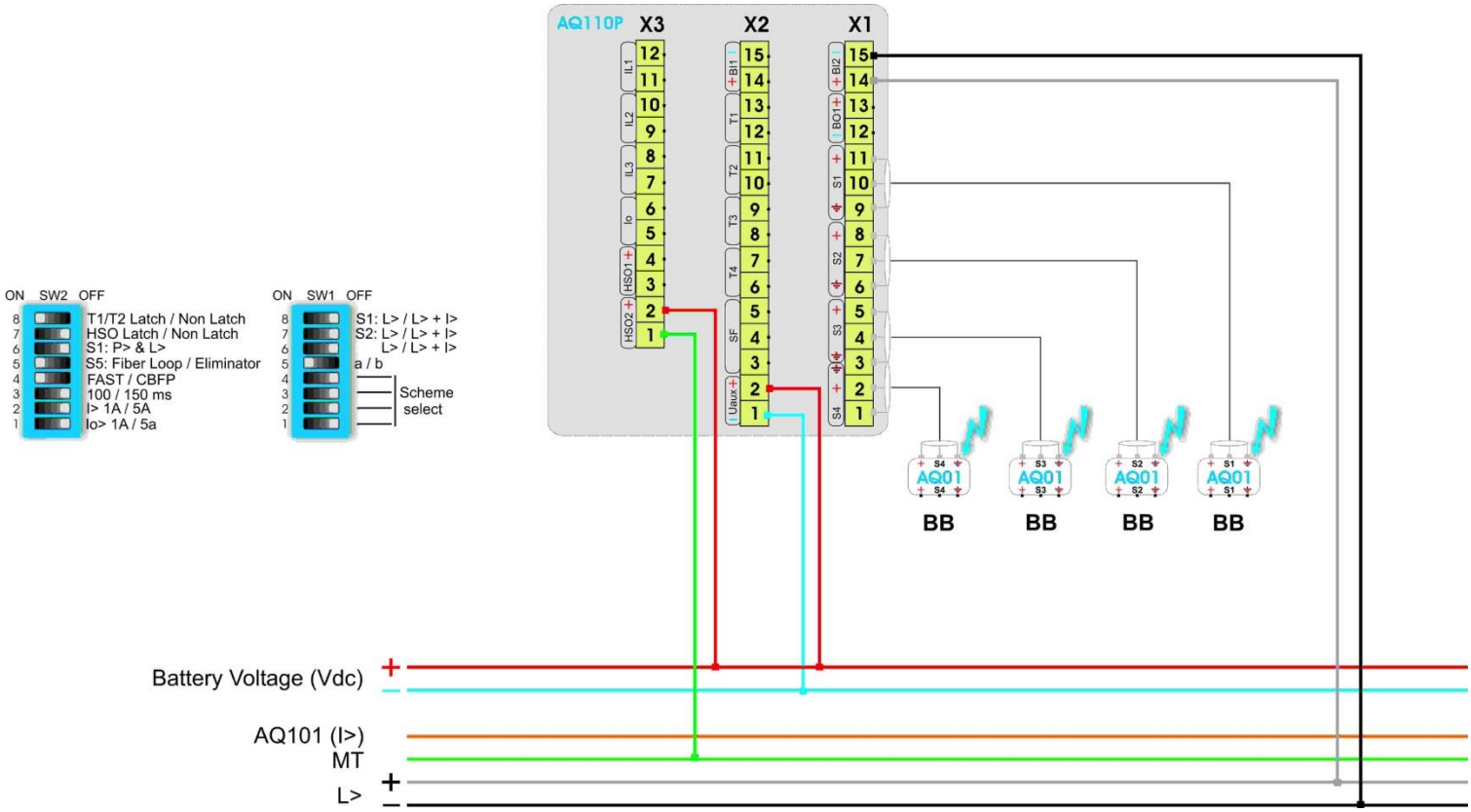

AQ101-SS6:

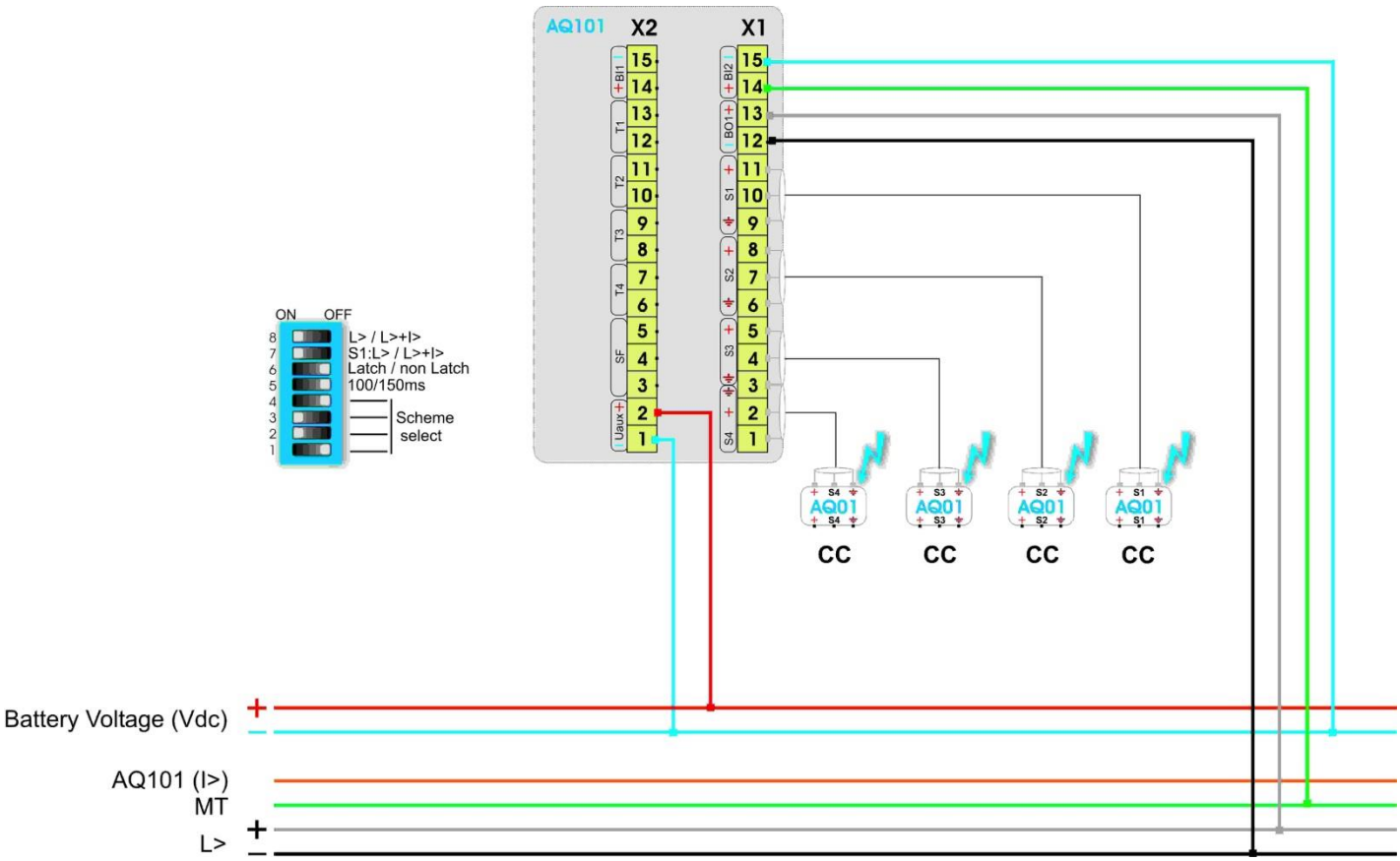
AQ101
X2
X1
BI1
T1
T2
T3
T4
SF
Uaux
BI2
BO1
S1
S2
S3
S4
ON
OFF
L> / L>+I>
S1:L> / L>+I>
Latch / non Latch
100/150ms
Scheme
select
AQ01
CC
Battery Voltage (Vdc)
AQ101 (I>)
MT
L>

2. Two Incomers without Tie Breaker

2.1. Two Incomers Without Tie Breaker (AQ110P-SS4a)

2.1.1. Scheme characteristics

Scheme Selection Number	AQ110P – SS2a; AQ110P – SS4a; AQ101 – SS1
Number of Incoming Feeders	2 x incoming feeders
Number of Outgoing Feeders	M x outgoing feeders
Number of the Circuit Breakers	2 x incomer CBs; M x outgoing CBs
Selective Trip for Incoming Feeder CBs	YES
Selective Trip for Outgoing Feeder CBs	YES
Master Trip Function	YES
Units Applied	2 x AQ110P; M x AQ101

M: 1 to 20.

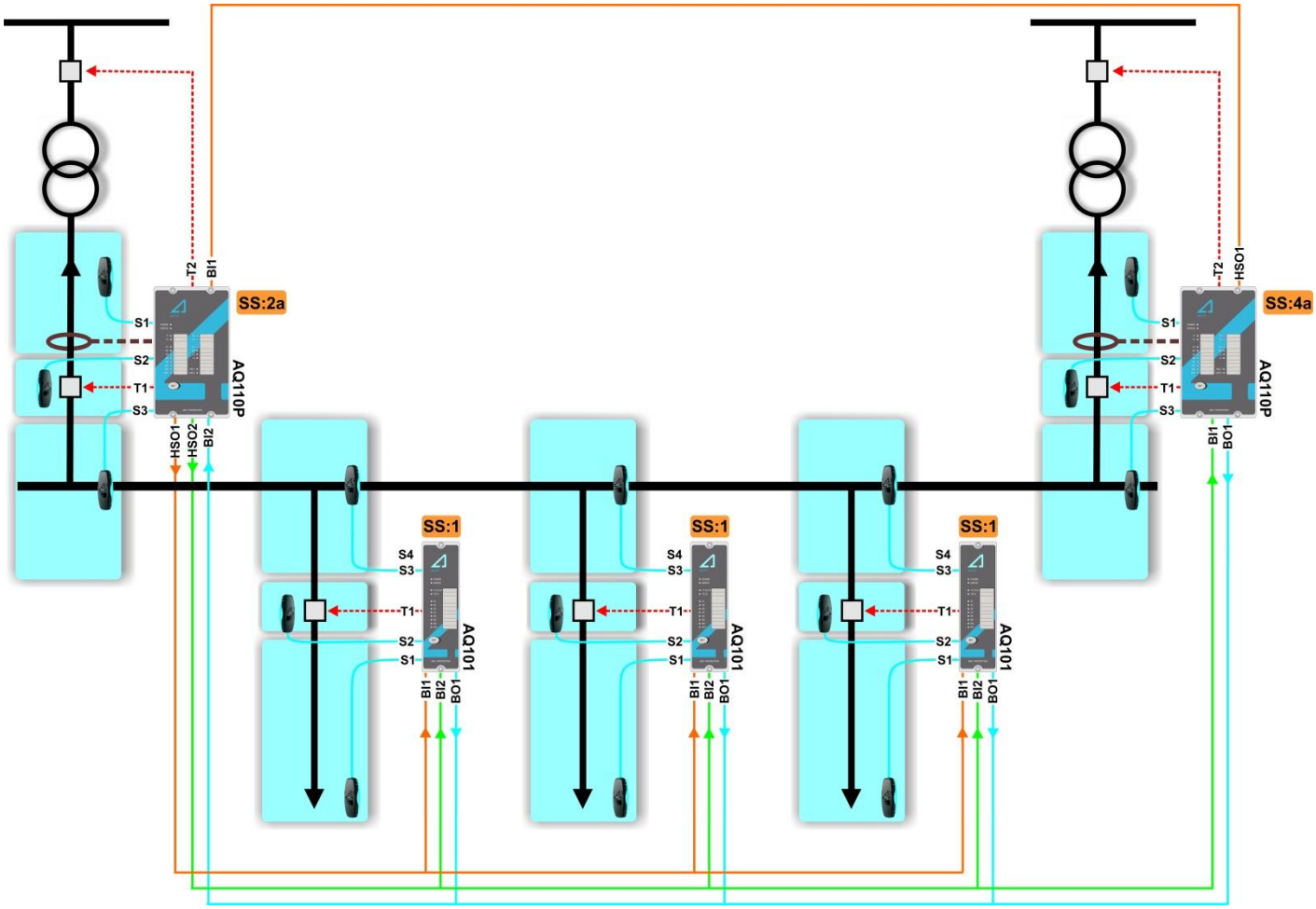

Figure 2-1: Two Incomers without Tie Breaker

2.1.2. TRIP AND I/O DESCRIPTION

AQ110P-SS2A:

L>	I> (ext.)	I> (int.)	I/O Description	Trip Description
		IL, Io	✓ Current inputs Phase IL1, IL2, IL3 and E/F Io. ✓ Measuring current for incomer(s).	✓ Signal outputs: HSO1 (I>) to outgoing units AQ101-SS1 input BI1.
	BI1		✓ Binary input 1.	✓ Signal outputs: HSO1 (I>) to outgoing units AQ101-SS1 input BI1. ✓ Signal inputs: I> from incomer unit AQ110P-SS4a output HSO1.
S1			✓ Sensor channel 1. ✓ Monitoring incoming cable compartment.	✓ Trip criteria: L> only. ✓ Trip outputs: T1 (incomer CB), T2 (upstream CB (HV side)), T4 (trip alarm).
S2		IL, Io	✓ Sensor channel 2. ✓ Monitoring incoming circuit breaker compartment.	✓ Trip criteria: I> + L>. ✓ Trip outputs: T1 (incomer CB), T2 (upstream CB (HV side)), T3 (not in use), T4 (trip alarm). ✓ Signal outputs: HSO2 (MT) to incomer unit AQ110P-SS4a input BI1 and outgoing units AQ101-SS1 input BI2.
	BI1			
S3/S4		IL, Io	✓ Sensor channel 3/4. ✓ Monitoring busbar compartment.	✓ Trip criteria: I> + L>. ✓ Trip outputs: T1 (incomer CB), T3 (not in use), T4 (trip alarm). ✓ Signal outputs: HSO2 (MT) to incomer unit AQ110P-SS4a input BI1 and outgoing units AQ101-SS1 input BI2.
	BI1			
BI2		IL, Io	✓ Binary input 2.	✓ Trip criteria: I> + L>. ✓ Trip outputs: T1 (incomer CB), T3 (not in use), T4 (trip alarm). ✓ Signal outputs: HSO2 (MT) to incomer unit AQ110P-SS4a input BI1 and outgoing unit AQ101-SS1 input BI2. ✓ Signal outputs: L> from outgoing units AQ101-SS1 output BO1 and incomer unit AQ110P-SS4a output BO1.
	BI1			

Table 2-1: Trip and I/O Description - AQ110P SS2a

Inputs			Outputs						
L>	**I> (ext.)**	**I> (int.)**	**T1**	**T2**	**T3**	**T4**	**HSO1 (I>)**	**HSO2 (MT)**	**BO1**
		IL, Io					√		√
	BI1								
S1			√	√		√			
S2		IL, Io	√	√	√	√	√	√	√
	BI1								
S3		IL, Io	√		√	√	√	√	√
	BI1								
S4		IL, Io	√		√	√	√	√	√
	BI1								
BI2		IL, Io	√		√	√	√	√	√
	BI1								

Table 2-2: Trip and I/O logic - AQ110P SS2a

AQ110P-SS4A:

L>	I> (int.)	I/O Description	Trip Description
	IL, Io	✓ Current inputs Phase IL1, IL2, IL3 and E/F Io. ✓ Measuring current for incomer(s).	✓ Signal outputs: HSO1 (I>) to incomer unit AQ110P-SS2a input BI1.
S1		✓ Sensor channel 1. ✓ Monitoring incoming cable compartment.	✓ Trip criteria: L> only. ✓ Trip outputs: T1 (incomer CB), T2 (upstream CB (HV side)), T4 (trip alarm).
S2	IL, Io	✓ Sensor channel 2. ✓ Monitoring incoming circuit breaker compartment.	✓ Trip criteria: I> + L>. ✓ Trip outputs: T1 (incomer CB), T2 (upstream CB (HV side)), T3 (not in use), T4 (trip alarm). ✓ Signal outputs: BO1 (L>) to incomer unit AQ110P-SS2a input BI2. ✓ Signal inputs: MT from incomer unit AQ110P-SS2a output HSO2.
S3/S4	IL, Io	✓ Sensor channel 3/4. ✓ Monitoring busbar compartment.	✓ Trip criteria: I> + L>. ✓ Trip outputs: T1 (incomer CB), T3 (not in use), T4 (trip alarm). ✓ Signal outputs: BO1 (L>) to incomer unit AQ110P-SS2a input BI2. ✓ Signal inputs: MT from incomer unit AQ110P-SS2a output HSO2.
BI1		✓ Binary input 1.	✓ Trip criteria: I> + L>. ✓ Trip outputs: T1 (incomer CB), T3 (not in use), T4 (trip alarm). ✓ Signal inputs: MT from incomer unit AQ110P-SS2a output HSO2.

Table 2-3: Trip and I/O Description - AQ110P SS4a

Inputs		Outputs						
L>	**I> (int.)**	**T1**	**T2**	**T3**	**T4**	**HSO1 (I>)**	**HSO2 (MT)**	**BO1 (L>)**
S1		√	√		√			
S2	IL, Io	√	√	√	√	√		√
S3	IL, Io	√		√	√	√		√
S4	IL, Io	√		√	√	√		√
BI1		√(MT)		√(MT)	√(MT)			

Table 2-4: Trip and I/O Logic - AQ110P SS4a

AQ101-SS1:

L>	I> (ext.)	I/O Description	Trip Description
	BI1	✓ Binary input 1.	✓ Signal inputs: BI1 (I>) from incomer unit AQ110P-SS2a output HSO1.
S1	BI1	✓ Sensor channel 1. ✓ Monitoring outgoing cable compartment.	✓ Trip criteria: I> + L>. ✓ Trip outputs: T1 (outgoing CB), T3 (not in use), T4 (trip alarm). ✓ Signal outputs: BO1 (L>) to incomer unit AQ110P-SS2a after CBFP setting time.
S2	BI1	✓ Sensor channel 2. ✓ Monitoring outgoing circuit breaker compartment.	✓ Trip criteria: I> + L>. ✓ Trip outputs: T2 (CBFP), T4 (CBFP). ✓ Signal outputs: BO1 (L>) to incomer unit AQ110P-SS2a input BI2. ✓ Signal inputs: BI2 (MT) from incomer unit AQ110P-SS2a output HSO2.
S3/S4	BI1	✓ Sensor channel 3/4. ✓ Monitoring busbar compartment.	✓ Trip criteria: I> + L>. ✓ Trip outputs: T2 (CBFP), T4 (CBFP). ✓ Signal outputs: BO1 (L>) to incomer unit AQ110P-SS2a input BI2. ✓ Signal inputs: BI2 (MT) from incomer unit AQ110P-SS2a output HSO2.
BI2		✓ Binary input 2.	✓ Trip criteria: I> + L>. ✓ Trip outputs: T1 (outgoing CB), T2 (not in use), T3 (not in use), T4 (trip alarm). ✓ Signal inputs: BI2 (MT) from incomer unit AQ110P-SS2a output HSO2.

Table 2-5: Trip and I/O Description - AQ101 SS1

Inputs		Outputs				
L>	**I> (ext.)**	**T1**	**T2**	**T3**	**T4**	**BO1**
	BI1					
S1	BI1	√	√(CBFP)	√	√	√(CBFP)
S2	BI1		√(CBFP)		√(CBFP)	√
S3	BI1		√(CBFP)		√(CBFP)	√
S4	BI1		√(CBFP)		√(CBFP)	√
BI2		√(MT)	√(MT)	√(MT)	√(MT)	

Table 2-6: Trip and I/O Logic - AQ101-SS1

2.1.3. CONNECTIONS

AQ110P-SS2A:

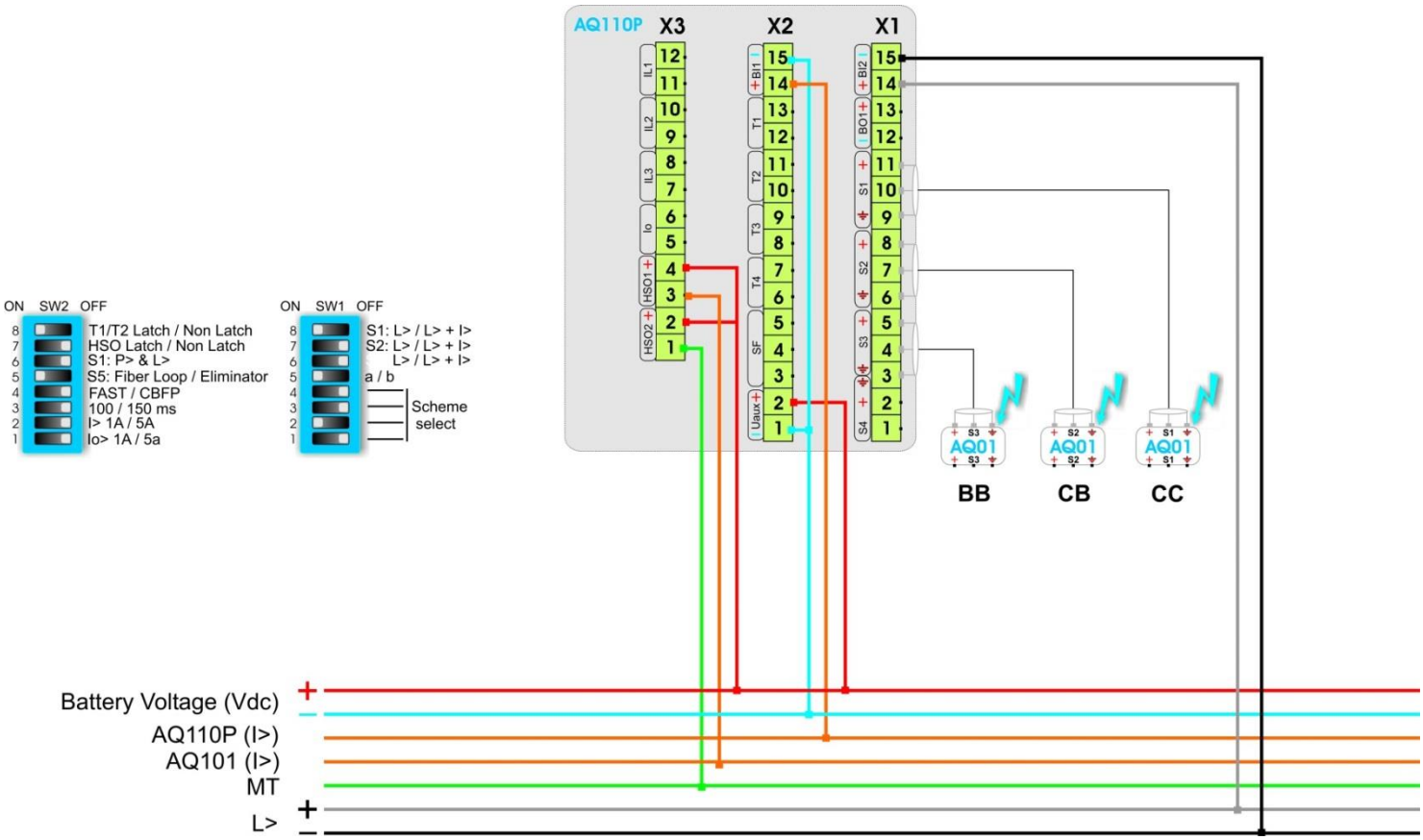

AQ110P-SS4A:

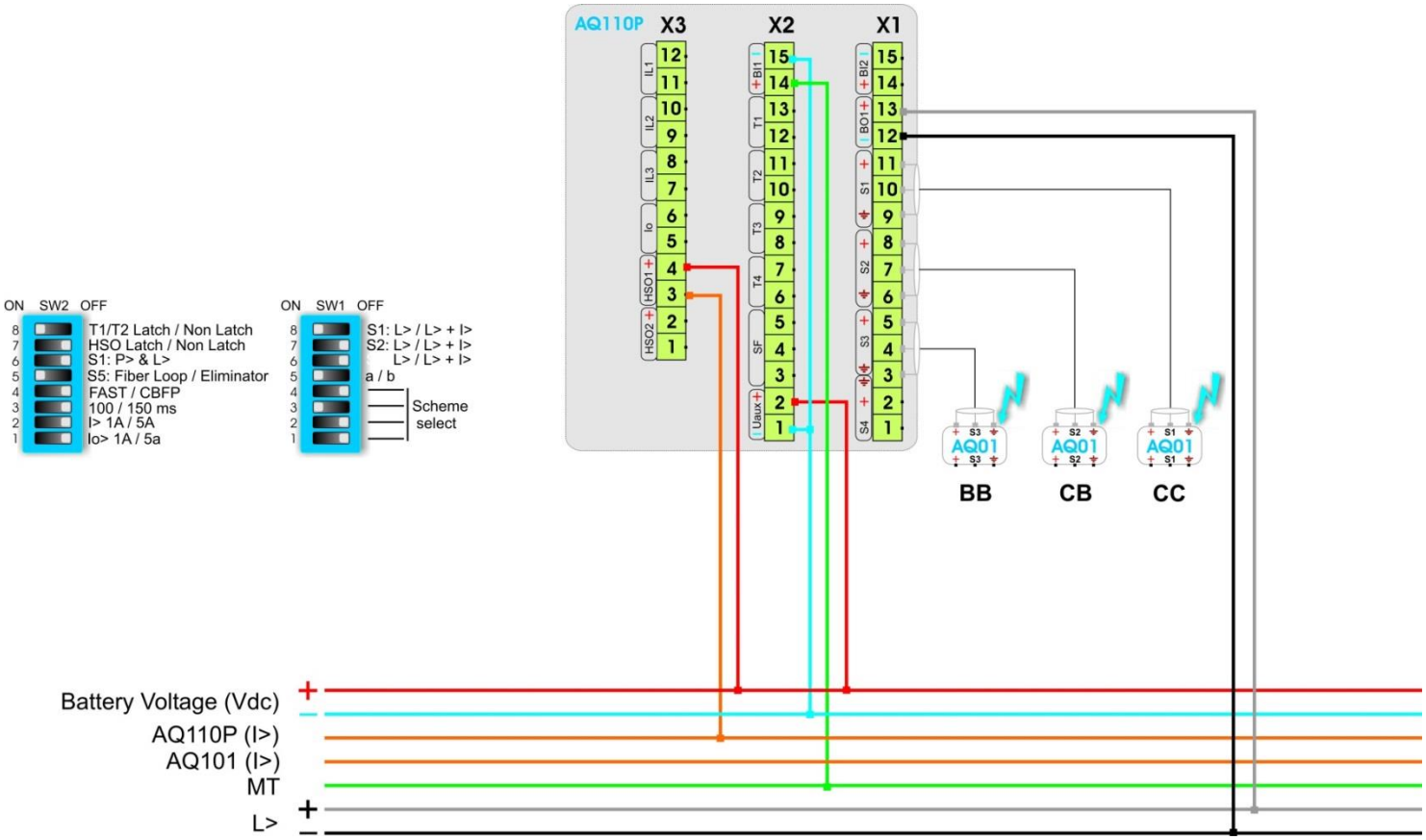
AQ110P
X3
X2
X1
ON SW2 OFF
T1/T2 Latch / Non Latch
HSO Latch / Non Latch
S1: P> & L>
S5: Fiber Loop / Eliminator
FAST / CBFP
100 / 150 ms
I> 1A / 5A
Io> 1A / 5a
ON SW1 OFF
S1: L> / L> + I>
S2: L> / L> + I>
L> / L> + I>
a / b
Scheme select
AQ01
BB
CB
CC
Battery Voltage (Vdc)
AQ110P (I>)
AQ101 (I>)
MT
L>

AQ101-SS1:

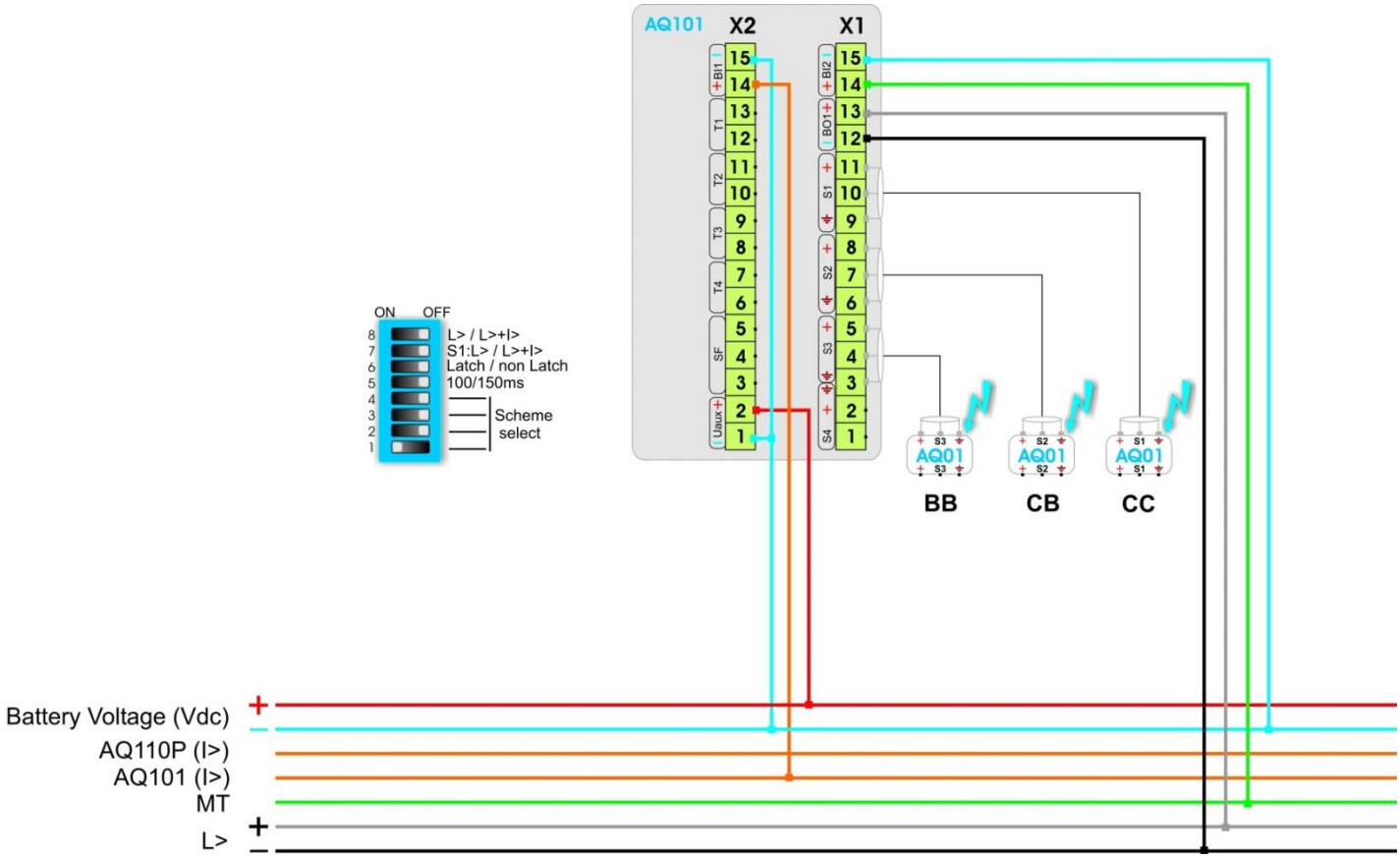
AQ101
X2
X1
ON
OFF
L> / L>+I>
S1:L> / L>+I>
Latch / non Latch
100/150ms
Scheme
select
AQ01
BB
CB
CC
Battery Voltage (Vdc)
AQ110P (I>)
AQ101 (I>)
MT
L>

3. Two Incomers with Tie Breaker

3.1. Two Incomers With Tie BREAKER (AQ101-SS1)

3.1.1. Scheme characteristics

Scheme Selection Number	AQ110P – SS2a; AQ101 – SS1
Number of Incoming Feeders	2 x incoming feeders
Number of Outgoing Feeders	M x outgoing feeders
Number of the Circuit Breakers	2 x incomer CBs; M x outgoing CBs
Selective Trip for Incoming Feeder CBs	YES
Selective Trip for Outgoing Feeder CBs	YES
Master Trip Function	YES
Units Applied	2 x AQ110P; M x AQ101

M: 1 to 20.

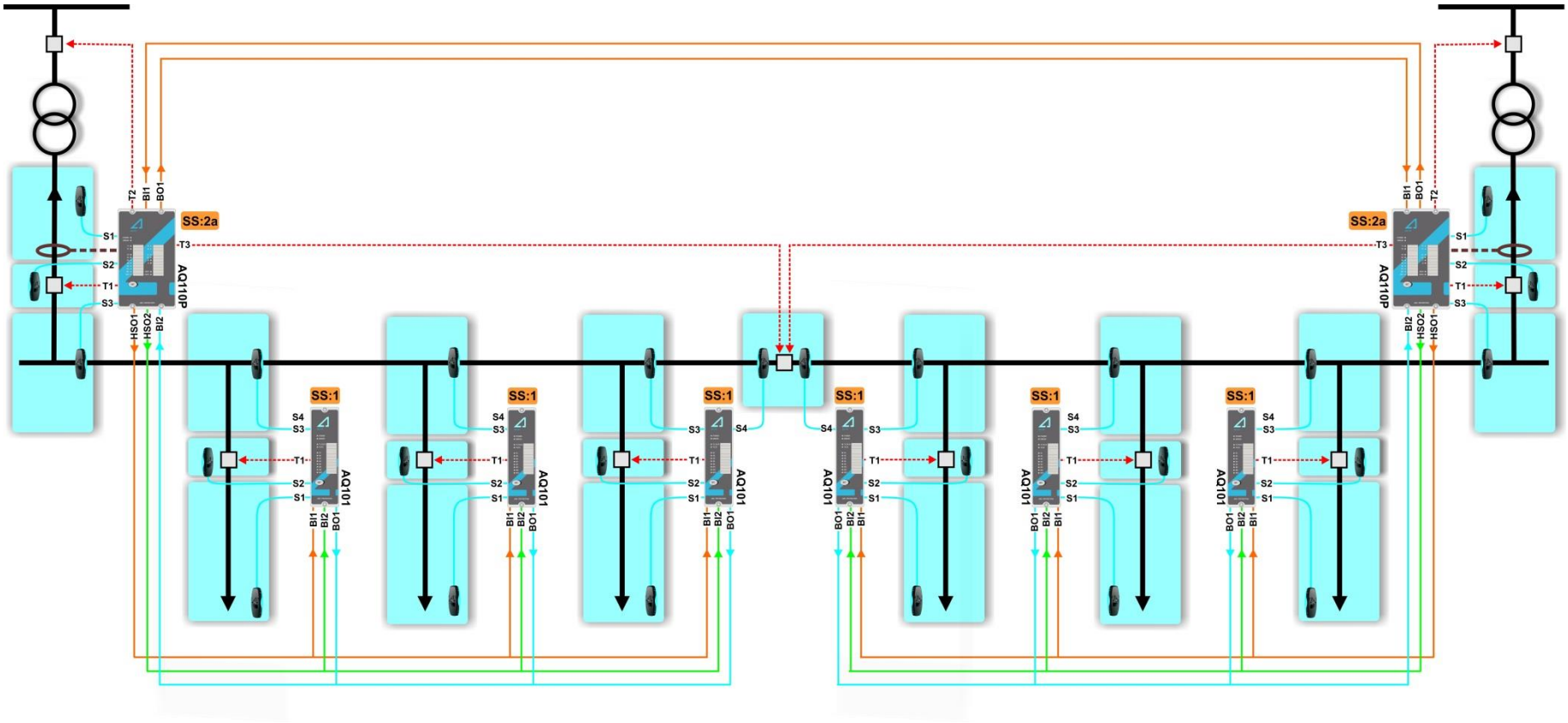

Figure 3-1 Two Incomers with Tie Breaker

3.1.2. I/O Description

AQ110P – SS2a:

L>	I> (ext.)	I> (int.)	I/O Description	Trip Description
		IL, Io	✓ Current inputs Phase IL1, IL2, IL3 and E/F Io. ✓ Measuring current for incomer(s).	✓ Signal outputs: HSO1 (I>) to outgoing units AQ101-SS1 input BI1. ✓ Signal outputs: BO1 (I>) to outgoing units AQ110P-SS2a input BI1.
	BI1		✓ Binary input 1.	✓ Signal inputs: I> from incomer unit AQ110P-SS2a output BO1.
S1			✓ Sensor channel 1. ✓ Monitoring incoming cable compartment.	✓ Trip criteria: L> only. ✓ Trip outputs: T1 (incomer CB), T2 (upstream CB (HV side)), T4 (trip alarm).
S2		IL, Io	✓ Sensor channel 2. ✓ Monitoring incoming circuit breaker compartment.	✓ Trip criteria: I> + L>. ✓ Trip outputs: T1 (incomer CB), T2 (upstream CB (HV side)), T3 (tie breaker), T4 (trip alarm). ✓ Signal outputs: HSO2 (MT) to outgoing units AQ101-SS1 input BI2.
	BI1			
S3/S4		IL, Io	✓ Sensor channel 3/4. ✓ Monitoring busbar compartment.	✓ Trip criteria: I> + L>. ✓ Trip outputs: T1 (incomer CB), T3 (tie breaker), T4 (trip alarm). ✓ Signal outputs: HSO2 (MT) to outgoing units AQ101-SS1 input BI2.
	BI1			
BI2		IL, Io	✓ Binary input 2.	✓ Trip criteria: I> + L> ✓ Trip outputs: T1 (incomer CB), T3 (tie breaker), T4 (trip alarm). ✓ Signal outputs: HSO2 (MT) to outgoing unit AQ101-SS1 input BI2. ✓ Signal inputs: BI2 (> from outgoing units AQ101-SS1 output BO1.
	BI1			

Table 3-1: Trip and I/O Description - AQ110P SS2a

Inputs			Outputs						
L>	**I> (ext.)**	**I> (int.)**	**T1**	**T2**	**T3**	**T4**	**HSO1 (I>)**	**HSO2 (MT)**	**BO1**
		IL, Io					√		√
	BI1								
S1			√	√		√			
S2		IL, Io	√	√	√	√	√	√	√
	BI1								
S3		IL, Io	√		√	√	√	√	√
	BI1								
S4		IL, Io	√		√	√	√	√	√
	BI1								
BI2		IL, Io	√		√	√	√	√	√
	BI1								

Table 3-2: Trip and I/O logic - AQ110P SS2a

AQ101 – SS1:

L>	I> (ext.)	I/O Description	Trip Description
	BI1	✓ Binary input 1.	✓ Signal inputs: BI1 (I>) from incomer unit AQ110P-SS2a output HSO1.
S1	BI1	✓ Sensor channel 1. ✓ Monitoring outgoing cable compartment.	✓ Trip criteria: I> + L>. ✓ Trip outputs: T1 (outgoing CB), T3 (not in use), T4 (trip alarm). ✓ Signal outputs: BO1 (L>) to incomer unit AQ110P-SS2a after CBFP setting time.
S2	BI1	✓ Sensor channel 2. ✓ Monitoring outgoing circuit breaker compartment.	✓ Trip criteria: I> + L>. ✓ Trip outputs: T2 (CBFP), T4 (CBFP). ✓ Signal outputs: BO1 (L>) to incomer unit AQ110P-SS2a input BI2. ✓ Signal inputs: BI2 (MT) from incomer unit AQ110P-SS2a output HSO2.
S3/S4	BI1	✓ Sensor channel 3/4. ✓ Monitoring busbar compartment.	✓ Trip criteria: I> + L>. ✓ Trip outputs: T2 (CBFP), T4 (CBFP). ✓ Signal outputs: BO1 (L>) to incomer unit AQ110P-SS2a input BI2. ✓ Signal inputs: BI2 (MT) from incomer unit AQ110P-SS2a output HSO2.
BI2		✓ Binary input 2.	✓ Trip criteria: I> + L>. ✓ Trip outputs: T1 (outgoing CB), T2 (not in use), T3 (not in use), T4 (trip alarm). ✓ Signal inputs: BI2 (MT) from incomer unit AQ110P-SS2a output HSO2.

Table 3-3: Trip and I/O Description - AQ101 SS1

Inputs		Outputs				
L>	**I> (ext.)**	**T1**	**T2**	**T3**	**T4**	**BO1**
	BI1					
S1	BI1	√	√(CBFP)	√	√	√(CBFP)
S2	BI1		√(CBFP)		√(CBFP)	√
S3	BI1		√(CBFP)		√(CBFP)	√
S4	BI1		√(CBFP)		√(CBFP)	√
BI2		√(MT)	√(CBFP)	√(MT)	√(MT)	

Table 3-4: Trip and I/O Logic - AQ101-SS1

3.1.3. CONNECTIONS

AQ110P-SS2A:

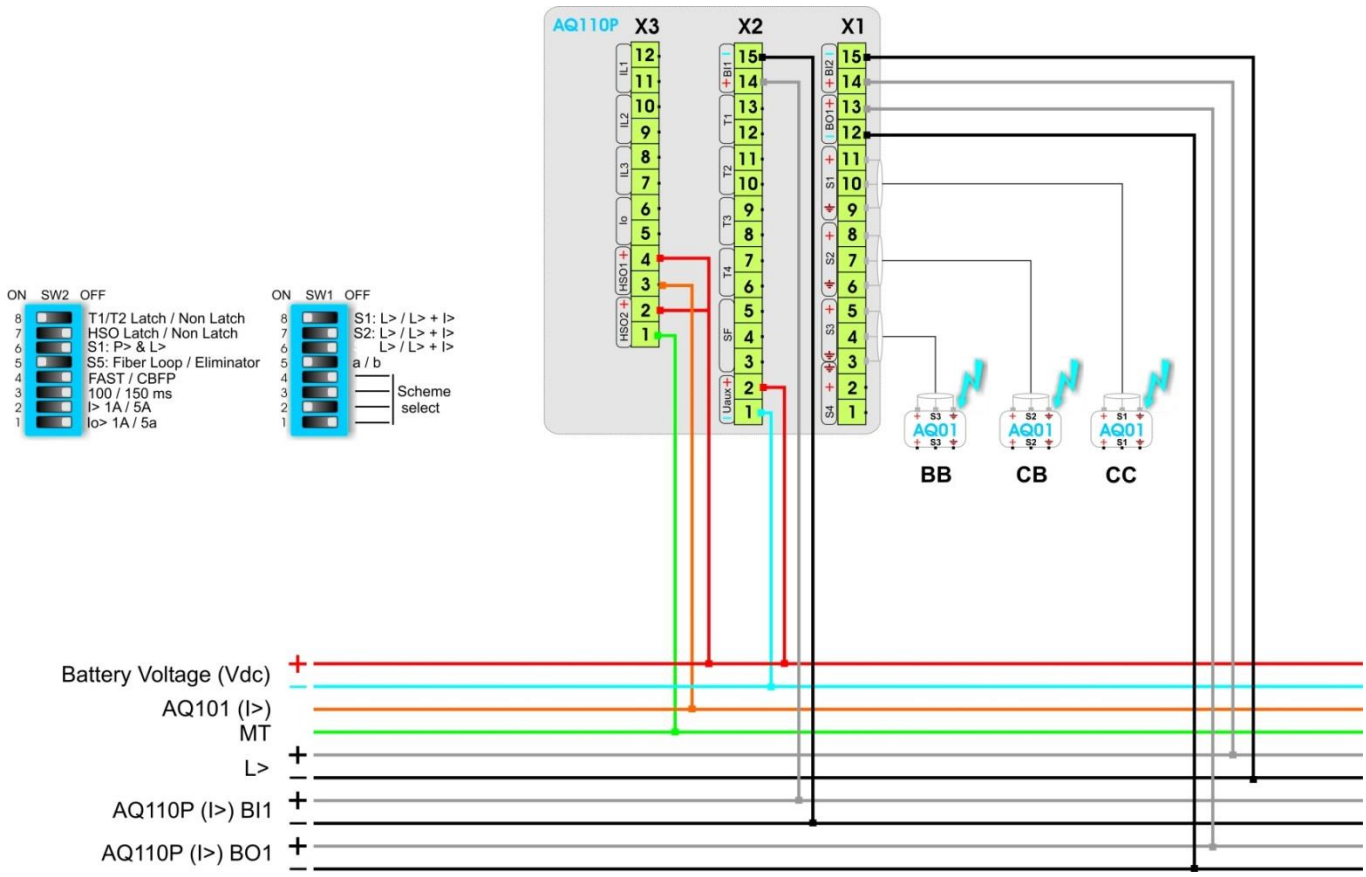

AQ101-SS1:

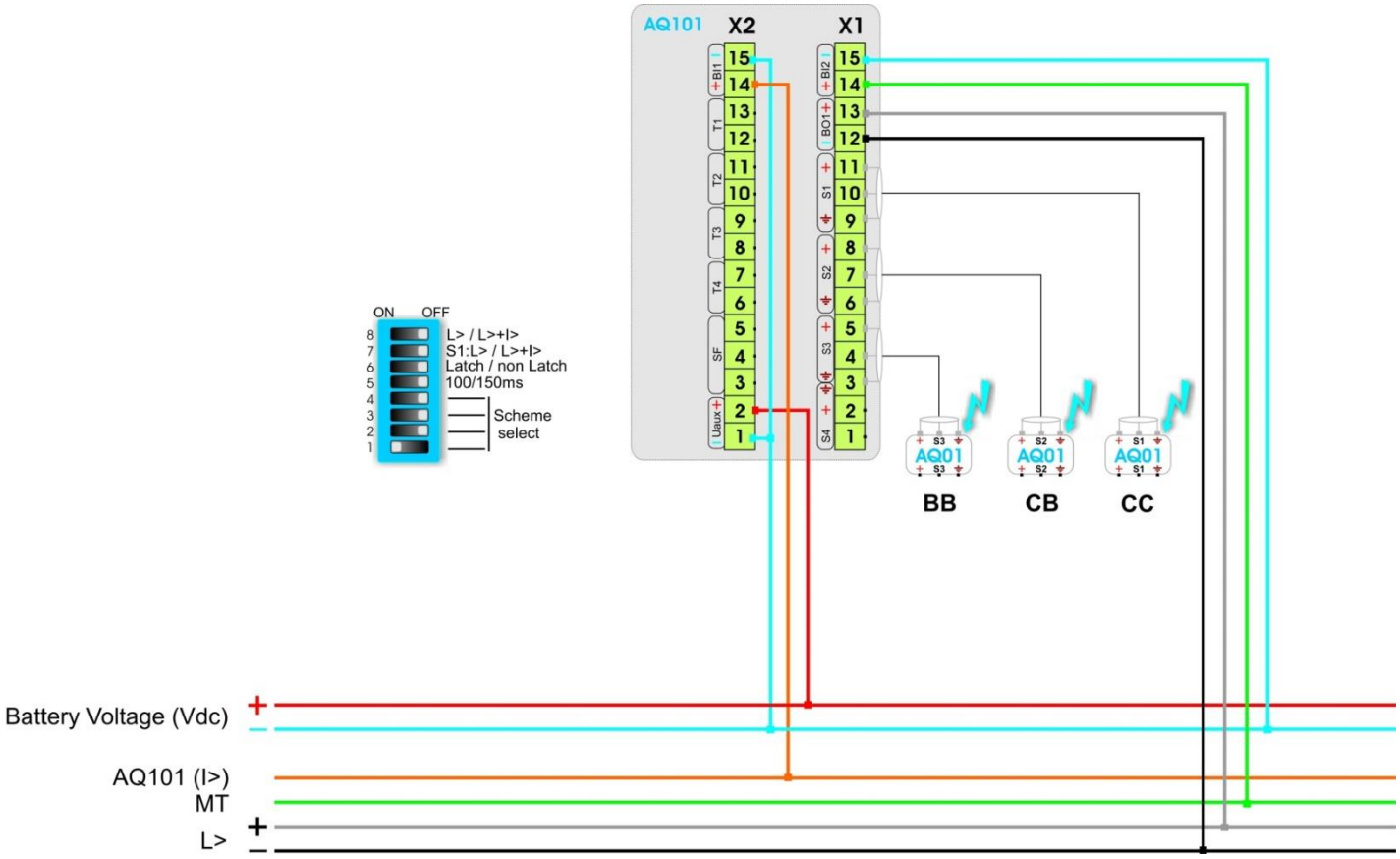
AQ101
X2
X1
ON
OFF
L> / L>+I>
S1:L> / L>+I>
Latch / non Latch
100/150ms
Scheme
select
BB
CB
CC
Battery Voltage (Vdc)
AQ101 (I>)
MT
L>

3.2. TWO INCOMER S WITH TIE BREAKER (AQ101-SS4)

3.2.1. SCHEME CHARACTERISTICS

Scheme Selection Number	AQ110P – SS2a; AQ101 – SS4
Number of Incoming Feeders	2 x incoming feeders
Number of Outgoing Feeders	M x outgoing feeders
Number of the Circuit Breakers	2 x incomer CBs; M x outgoing CBs
Selective Trip for Incoming Feeder CBs	YES
Selective Trip for Outgoing Feeder CBs	YES
Master Trip Function	YES
Units Applied	2 x AQ110P; M x AQ101

M: 1 to 20.

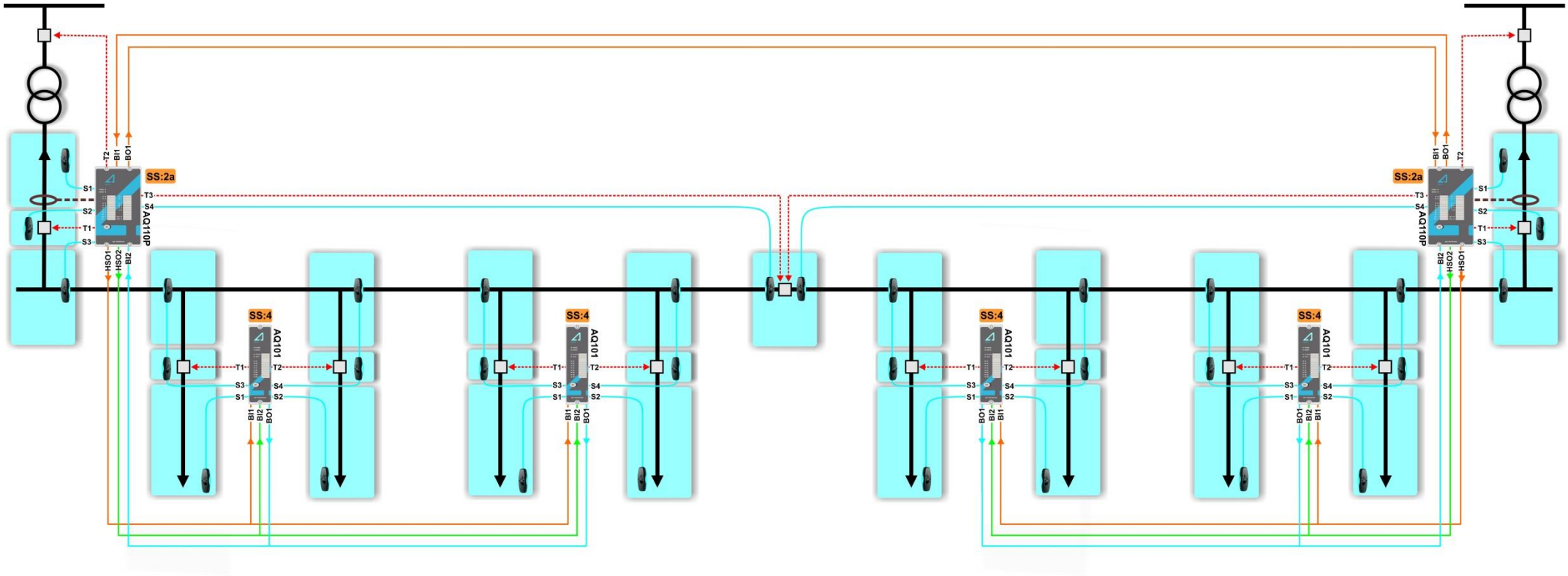

Figure 3-2 Two Incomers with Tie Breaker (AQ101-SS4)

3.2.2. Trip and I/O Description

AQ110P – SS2a:

L>	I> (ext.)	I> (int.)	I/O Description	Trip Description
		IL, Io	✓ Current inputs Phase IL1, IL2, IL3 and E/F Io. ✓ Measuring current for incomer(s).	✓ Signal outputs: HSO1 (I>) to outgoing units AQ101-SS4 input BI1. ✓ Signal outputs: BO1 (I>) to outgoing units AQ110P-SS2a input BI1.
	BI1		✓ Binary input 1.	✓ Signal inputs: I> from incomer unit AQ110P-SS2a output BO1.
S1			✓ Sensor channel 1. ✓ Monitoring incoming cable compartment.	✓ Trip criteria: L> only. ✓ Trip outputs: T1 (incomer CB), T2 (upstream CB (HV side)), T4 (trip alarm).
S2		IL, Io	✓ Sensor channel 2. ✓ Monitoring incoming circuit breaker compartment.	✓ Trip criteria: I> + L>. ✓ Trip outputs: T1 (incomer CB), T2 (upstream CB (HV side)), T3 (tie breaker), T4 (trip alarm). ✓ Signal outputs: HSO2 (MT) to outgoing units AQ101-SS4 input BI2.
	BI1			
S3		IL, Io	✓ Sensor channel 3. ✓ Monitoring busbar compartment.	✓ Trip criteria: I> + L>. ✓ Trip outputs: T1 (incomer CB), T3 (tie breaker), T4 (trip alarm). ✓ Signal outputs: HSO2 (MT) to outgoing units AQ101-SS4 input BI2.
	BI1			
S4		IL, Io	✓ Sensor channel 4. ✓ Monitoring tie breaker compartment.	✓ Trip criteria: I> + L>. ✓ Trip outputs: T1 (incomer CB), T3 (tie breaker), T4 (trip alarm). ✓ Signal outputs: HSO2 (MT) to outgoing units AQ101-SS4 input BI2.
	BI1			
BI2		IL, Io	✓ Binary input 2.	✓ Trip criteria: I> + L> ✓ Trip outputs: T1 (incomer CB), T3 (tie breaker), T4 (trip alarm). ✓ Signal outputs: HSO2 (MT) to outgoing unit AQ101-SS4 input BI2. ✓ Signal inputs: BI2 (L>) from outgoing units AQ101-SS4 output BO1.
	BI1			

Table 3-5: Trip and I/O Description - AQ110P SS2a

Inputs			Outputs						
L>	**I> (ext.)**	**I> (int.)**	**T1**	**T2**	**T3**	**T4**	**HSO1 (I>)**	**HSO2 (MT)**	**BO1**
		IL, Io					√		√
	BI1								
S1			√	√		√			
S2		IL, Io	√	√	√	√	√	√	√
	BI1								
S3		IL, Io	√		√	√	√	√	√
	BI1								
S4		IL, Io	√		√	√	√	√	√
	BI1								
BI2		IL, Io	√		√	√	√	√	√
	BI1								

Table 3-6: Trip and I/O logic - AQ110P SS2a

AQ101 – SS4:

L>	I> (ext.)	I/O Description	Trip Description
	BI1	✓ Binary input 1.	✓ Signal inputs: BI1 (I>) from incomer feeder AQ110P-SS2a HSO1.
S1	BI1	✓ Sensor channel 1. ✓ Monitoring outgoing cable compartment	✓ Trip criteria: I> + L>. ✓ Trip outputs: T1 (outgoing CB), T3 (not in use), T4 (Trip alarm). ✓ Signal outputs: BO1 (L>) to incomer unit AQ110P-SS2a after CBFP setting time.
S2	BI1	✓ Sensor channel 2. ✓ Monitoring outgoing cable compartment	✓ Trip criteria: I> + L>. ✓ Trip outputs: T2 (outgoing CB), T3 (not in use), T4 (Trip alarm). ✓ Signal outputs: BO1 (L>) to incomer unit AQ110P-SS2a BI2 after CBFP setting time.
S3/S4	BI1	✓ Sensor channel 3 & 4. ✓ Monitoring CB and BB compartment.	✓ Trip criteria: I> + L>. ✓ Trip outputs: T3 (not in use), T4 (Trip alarm). ✓ Signal outputs: BO1 (L>) to incomer unit AQ110P-SS2a BI2. ✓ Signal inputs: BI2 (MT) from incomer unit AQ110P-SS2a (HSO2).
BI2		✓ Binary input 2.	✓ Trip criteria: I> + L>. ✓ Trip outputs: T1 (outgoing CB), T2 (outgoing CB), T3 (not in use), T4 (Trip alarm). ✓ Signal outputs: BO1 (L>) to incomer unit AQ110P-SS2a BI2. ✓ Signal inputs: BI2 (MT) from incomer unit AQ110P-SS2a (HSO2).

Table 3-7 Trip and I/O Description - AQ101 SS4

L>	I> (ext.)	T1	T2	T3	T4	BO1
	BI1					
S1	BI1	√		√(CBFP)	√	√(CBFP)
S2	BI1		√	√(CBFP)	√	√(CBFP)
S3	BI1			√	√	√
S4	BI1			√	√	√
BI2		√(MT)	√(MT)	√(MT)	√(MT)	

Table 3-8 Trip and I/O Logic - AQ101 SS4

3.2.3. CONNECTIONS

AQ110P-SS2A:

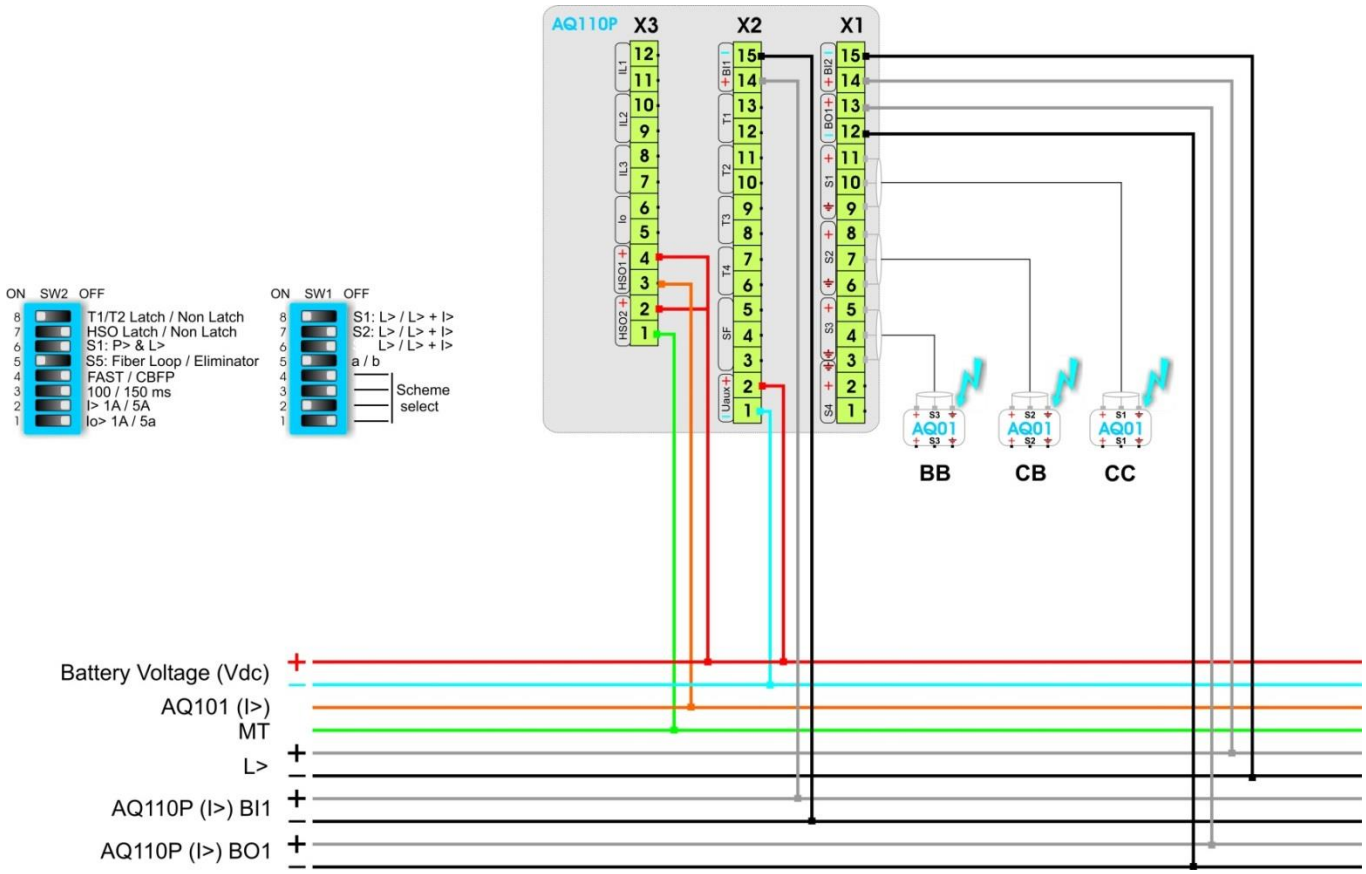

AQ101-SS4:

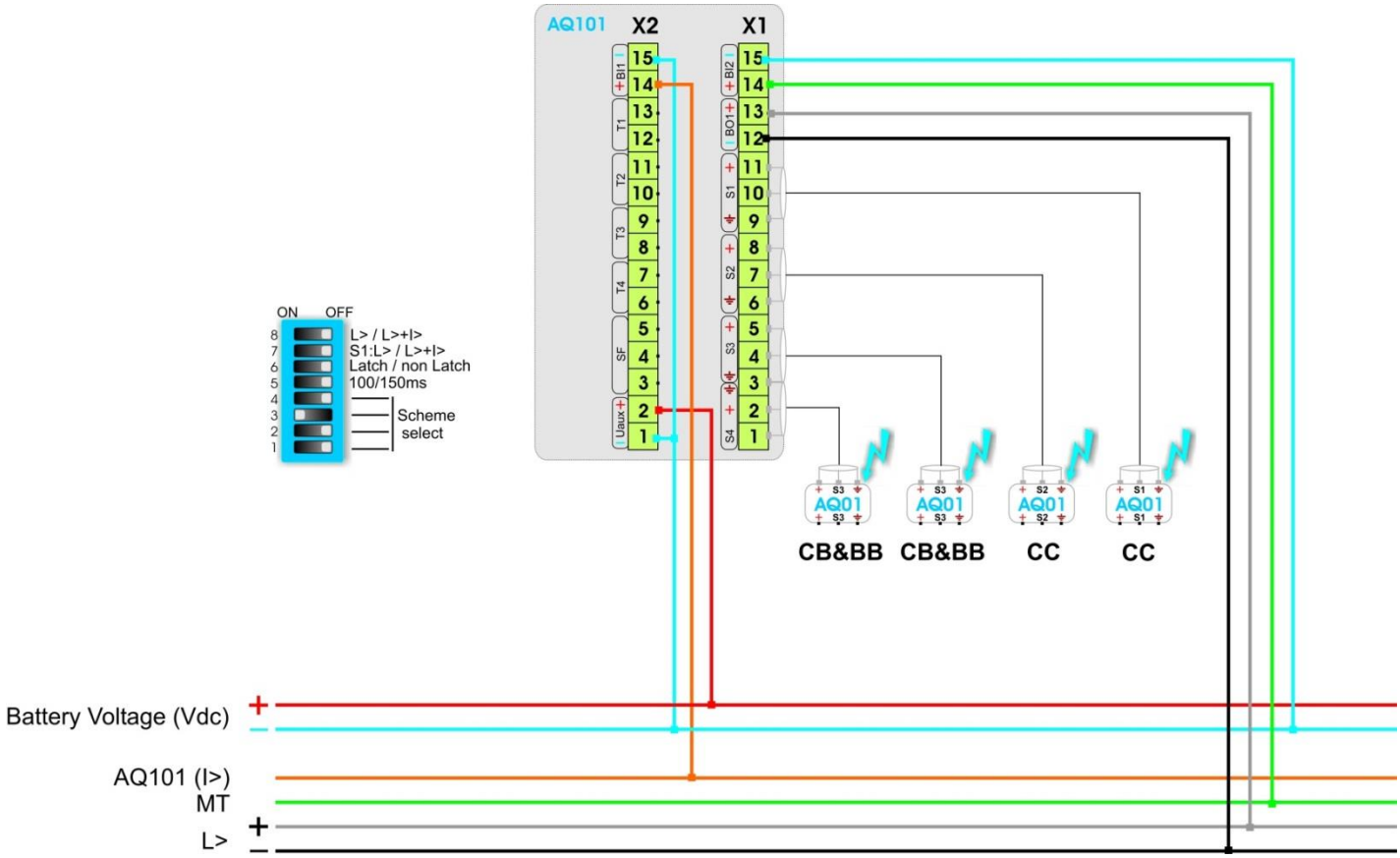
AQ101
X2
X1
ON
OFF
L> / L>+I>
S1:L> / L>+I>
Latch / non Latch
100/150ms
Scheme
select
AQ01
CB&BB
CB&BB
CC
CC
Battery Voltage (Vdc)
AQ101 (I>)
MT
L>

3.3. Two Incomers With Tie Breaker (AQ101-SS0)

3.3.1. Scheme characteristics

Scheme Selection Number	AQ110P – SS2a; AQ101 – SS0
Number of Incoming Feeders	2 x incoming feeders
Number of Outgoing Feeders	M x outgoing feeders
Number of the Circuit Breakers	2 x incomer CBs; M x outgoing CBs
Selective Trip for Incoming Feeder CBs	YES
Selective Trip for Outgoing Feeder CBs	NO
Master Trip Function	YES
Units Applied	2 x AQ110P; M x AQ101

M: 1 to 20.

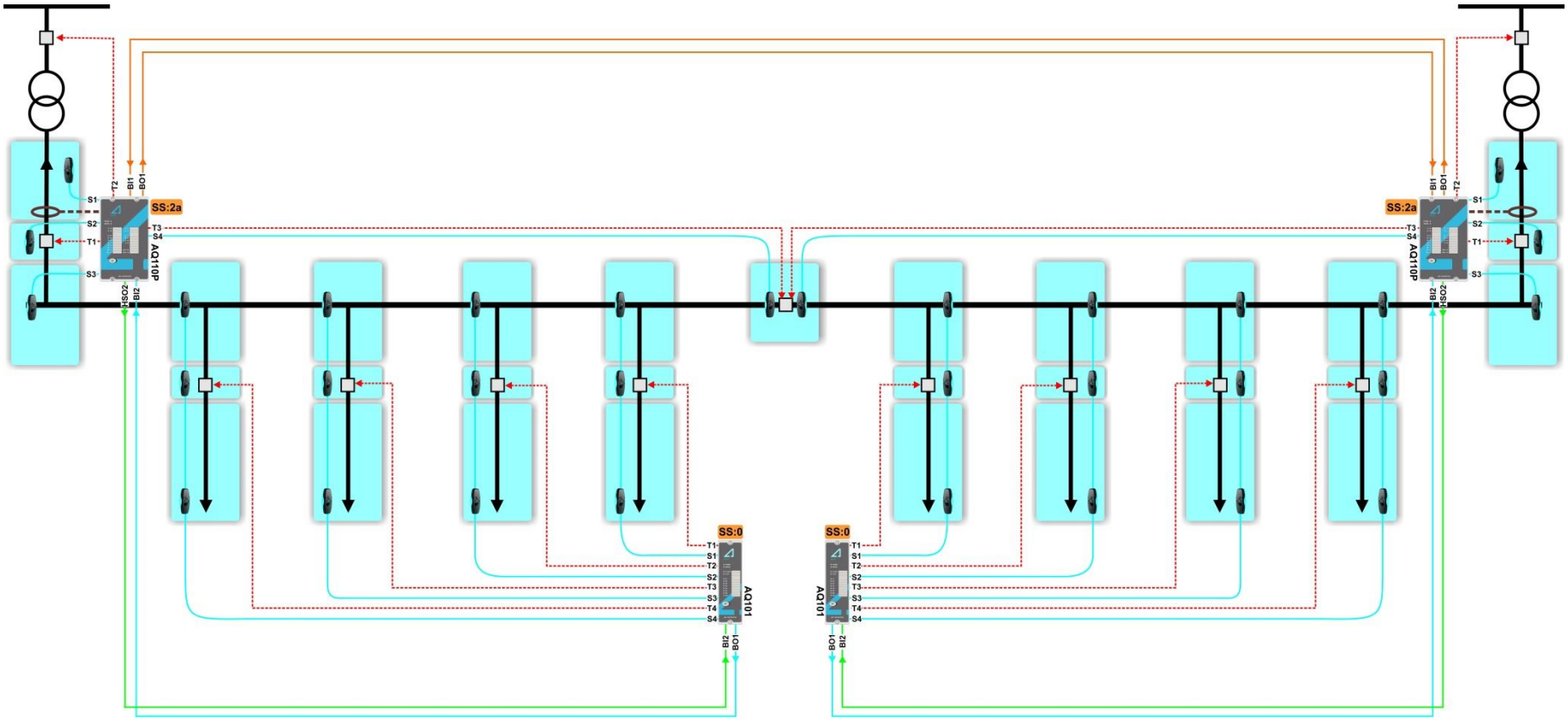

Figure 3-3 Two Incomers with Tie Breaker

3.3.2. I/O Description

AQ110P – SS2a:

L>	I> (int.)	I> (int.)	I/O Description	Trip Description
		IL, Io	✓ Current inputs Phase IL1, IL2, IL3 and E/F Io. ✓ Measuring current for incomer(s).	✓ Signal outputs: BO1 (I>) to outgoing units AQ110P-SS2a input BI1.
	BI1		✓ Binary input 1.	✓ Signal inputs: I> from incomer unit AQ110P-SS2a output BO1.
S1			✓ Sensor channel 1. ✓ Monitoring incoming cable compartment.	✓ Trip criteria: L> only. ✓ Trip outputs: T1 (incomer CB), T2 (upstream CB (HV side)), T4 (trip alarm).
S2		IL, Io	✓ Sensor channel 2. ✓ Monitoring incoming circuit breaker compartment.	✓ Trip criteria: I> + L>. ✓ Trip outputs: T1 (incomer CB), T2 (upstream CB (HV side)), T3 (tie breaker), T4 (trip alarm). ✓ Signal outputs: HSO2 (MT) to outgoing units AQ101-SS0 input BI2.
	BI1			
S3		IL, Io	✓ Sensor channel 3. ✓ Monitoring busbar compartment.	✓ Trip criteria: I> + L>. ✓ Trip outputs: T1 (incomer CB), T3 (tie breaker), T4 (trip alarm). ✓ Signal outputs: HSO2 (MT) to outgoing units AQ101-SS0 input BI2.
	BI1			
S4		IL, Io	✓ Sensor channel 4. ✓ Monitoring tie breaker compartment.	✓ Trip criteria: I> + L>. ✓ Trip outputs: T1 (incomer CB), T3 (tie breaker), T4 (trip alarm). ✓ Signal outputs: HSO2 (MT) to outgoing units AQ101-SS0 input BI2.
	BI1			
BI2		IL, Io	✓ Binary input 2.	✓ Trip criteria: I> + L> ✓ Trip outputs: T1 (incomer CB), T3 (tie breaker), T4 (trip alarm). ✓ Signal outputs: HSO2 (MT) to outgoing unit AQ101-SS0 input BI2. ✓ Signal inputs: BI2 (L>) from outgoing units AQ101-SS0 output BO1.
	BI1			

Table 3-9: Trip and I/O Description - AQ110P SS2a

Inputs			Outputs						
L>	**I> (ext.)**	**I> (int.)**	**T1**	**T2**	**T3**	**T4**	**HSO1 (I>)**	**HSO2 (MT)**	**BO1**
		IL, Io					√*		√
	BI1								
S1			√	√		√			
S2		IL, Io	√	√	√	√	√*	√	√
	BI1								
S3		IL, Io	√		√	√	√*	√	√
	BI1								
S4		IL, Io	√		√	√	√*	√	√
	BI1								
BI2		IL, Io	√		√	√	√*	√	√
	BI1								

Table 3-10: Trip and I/O logic - AQ110P SS2a

√*: HSO1 (I>) is not in use.

AQ101 – SS0:

L>	I/O Description	Trip Description
	✓ Binary input 1.	✓ Signal inputs: BI1 (I>) from incomer unit AQ110P-SS2a output HSO1.
S1	✓ Sensor channel 1. ✓ Monitoring cable, breaker and busbar compartment.	✓ Trip criteria: L>. ✓ Trip outputs: T1, T2, T3 and T4 (outgoing CB). ✓ Signal outputs: BO1 (L>) to incomer unit AQ110P-SS2a input BI2.
S2	✓ Sensor channel 2. ✓ Monitoring cable, breaker and busbar compartment.	✓ Trip criteria: L>. ✓ Trip outputs: T1, T2, T3 and T4 (outgoing CB). ✓ Signal outputs: BO1 (L>) to incomer unit AQ110P-SS2a input BI2.
S3/S4	✓ Sensor channel 3/4. ✓ Monitoring cable, breaker and busbar compartment.	✓ Trip criteria: L>. ✓ Trip outputs: T1, T2, T3 and T4 (outgoing CB). ✓ Signal outputs: BO1 (L>) to incomer unit AQ110P-SS2a input BI2.
BI2	✓ Binary input 2.	✓ Trip criteria: L>. ✓ Trip outputs: T1, T2, T3 and T4 (outgoing CB). ✓ Signal inputs: (MT) from incomer unit AQ110P-SS2a output HSO2.

Table 3-11: Trip and I/O Description - AQ101 SS0

Inputs	Outputs				
L>	**T1**	**T2**	**T3**	**T4**	**BO1**
S1	√	√	√	√	√
S2	√	√	√	√	√
S3	√	√	√	√	√
S4	√	√	√	√	√
BI2	√(MT)	√(MT)	√(MT)	√(MT)	

Table 3-12: Trip and I/O Logic - AQ101-SS0

3.3.3. CONNECTIONS

AQ110P-SS2A:

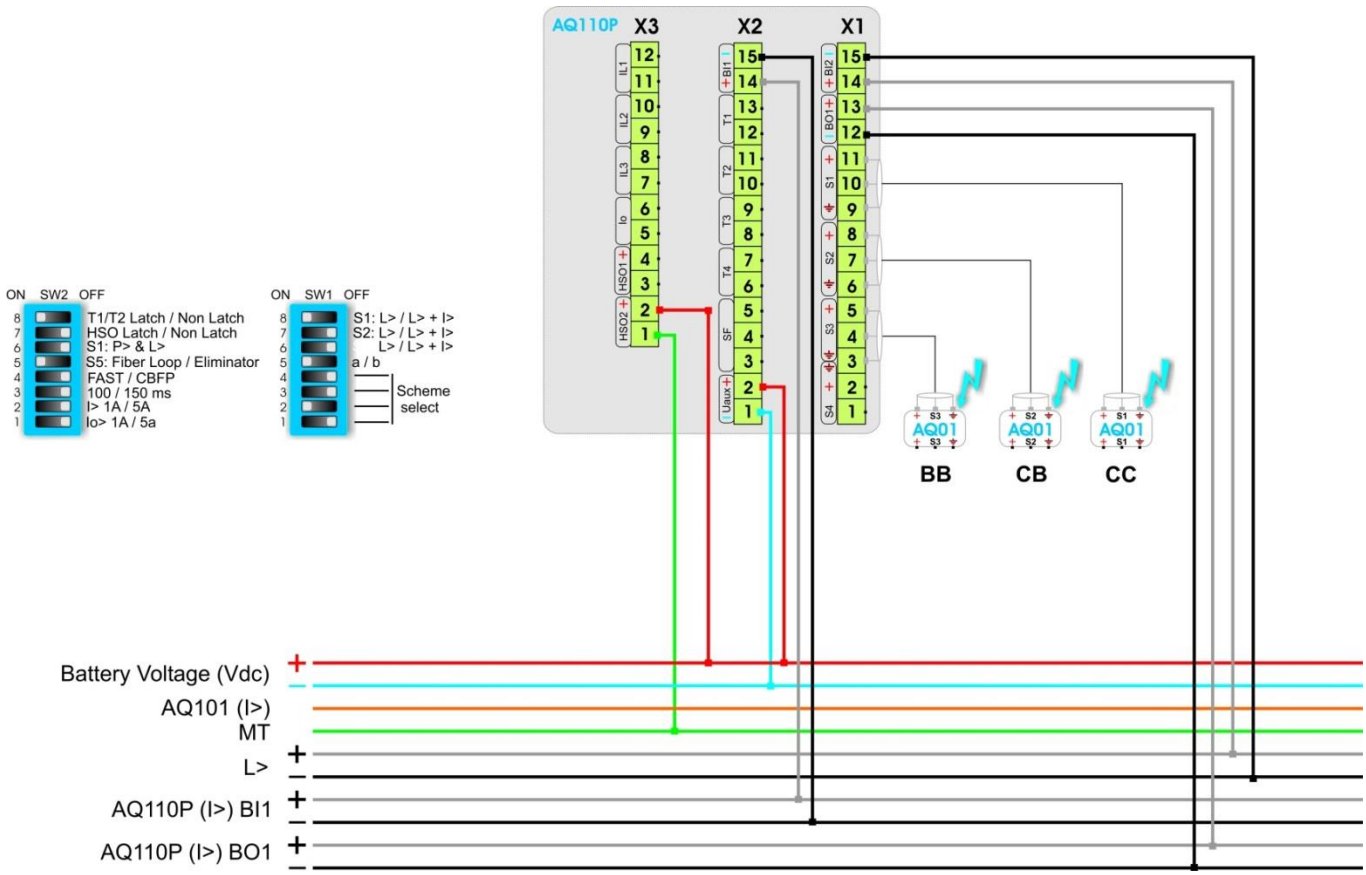

AQ101-SS0:

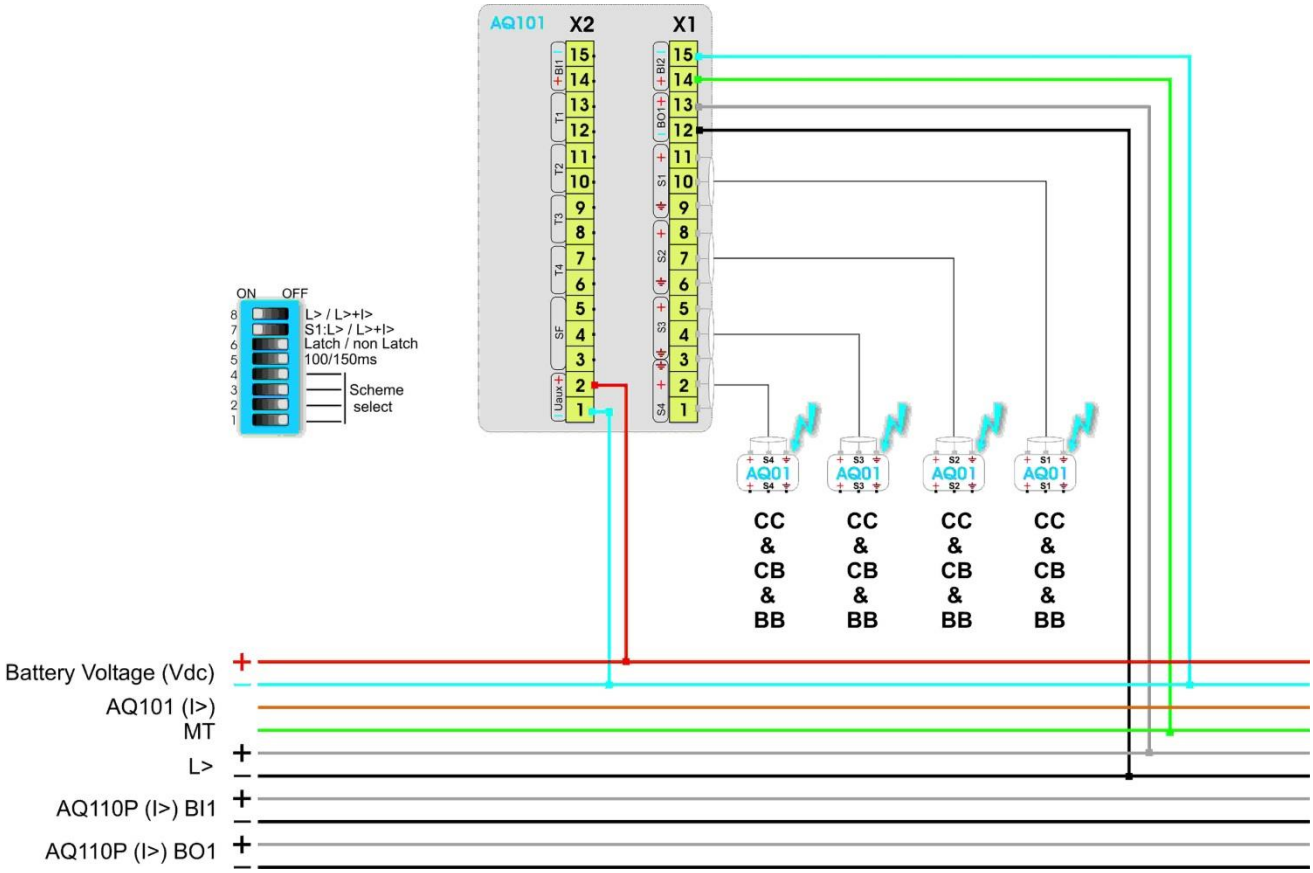
AQ101
X2
X1
ON
OFF
L> / L>+I>
S1:L> / L>+I>
Latch / non Latch
100/150ms
Scheme
select
AQ01
CC
&
CB
&
BB
Battery Voltage (Vdc)
AQ101 (I>)
MT
L>
AQ110P (I>) BI1
AQ110P (I>) BO1

3.4. Two Incomer s With Tie Breaker (AQ101S-SS12, AQ101S-SS5)

3.4.1. Scheme characteristics

Scheme Selection Number	AQ110P – SS3a; AQ101S – SS12, AQ101S – SS5;
Number of Incoming Feeders	2 x incoming feeders
Number of Outgoing Feeders	M x outgoing feeders
Number of the Circuit Breakers	2 x incomer CBs; M x outgoing CBs
Selective Trip for Incoming Feeder CBs	YES
Selective Trip for Outgoing Feeder CBs	YES
Master Trip Function	YES
Units Applied	2 x AQ110P; M x AQ101S – SS12; 1 X AQ101S – SS5;

M: 1 to 20.

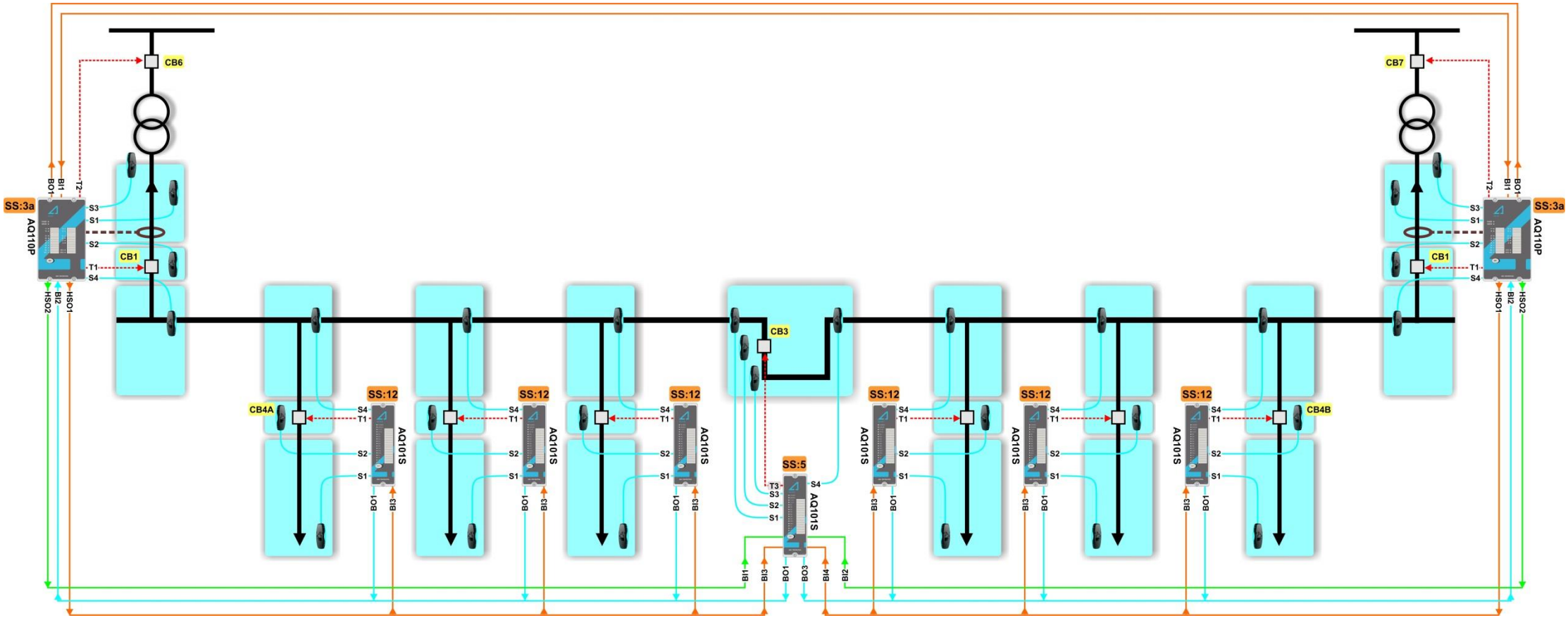

Figure 3-4 Two Incomers with Tie Breaker (AQ101S-SS12, AQ101S-SS5)

3.4.2. Trip and I/O Description

AQ110P – SS3a:

L>	I> (ext.)	I> (int.)	I/O Description	Trip Description
		IL, Io	✓ Current inputs Phase IL1, IL2, IL3 and E/F Io. ✓ Measuring current for incomer(s).	✓ Signal outputs: HSO1 (I>) to outgoing units AQ101S-SS12 input BI3 and AQ101S-SS5 input BI3. ✓ Signal outputs: BO1 (I>) to outgoing units AQ110P-SS3a input BI1.
	BI1		✓ Binary input 1.	✓ Signal inputs: I> from incomer unit AQ110P-SS3a output BO1.
S1		IL, Io	✓ Sensor channel 1. ✓ Monitoring incoming cable compartment.	✓ Trip criteria: I> + L>. ✓ Trip outputs: T1 (incomer CB), T2 (upstream CB (HV side)), T4 (trip alarm).
S2		IL, Io	✓ Sensor channel 2. ✓ Monitoring incoming circuit breaker compartment.	✓ Trip criteria: I> + L>. ✓ Trip outputs: T1 (incomer CB), T2 (upstream CB (HV side)), T4 (trip alarm). ✓ Signal outputs: HSO2 (MT) to outgoing units AQ101S-SS5 input BI1.
	BI1			
S3		IL, Io	✓ Sensor channel 3. ✓ Monitoring voltage transformer.	✓ Trip criteria: I> + L>. ✓ Trip outputs: T1 (incomer CB), T2 (upstream CB (HV side)), T4 (trip alarm).
S4		IL, Io	✓ Sensor channel 4. ✓ Monitoring busbar compartment.	✓ Trip criteria: I> + L>. ✓ Trip outputs: T1 (incomer CB), T4 (trip alarm). ✓ Signal outputs: HSO2 (MT) to outgoing units AQ101-SS5 input BI1.
BI2	BI1		✓ Binary input 2.	✓ Trip criteria: I> + L>. ✓ Trip outputs: T1 (incomer CB), T4 (trip alarm). ✓ Signal outputs: HSO2 (MT) to outgoing units AQ101-SS5 input BI1.

Table 3-13: Trip and I/O Description - AQ110P SS3a

Inputs			Outputs						
L>	**I> (ext.)**	**I> (int.)**	**T1**	**T2**	**T3**	**T4**	**HSO1 (I>)**	**HSO2 (MT)**	**BO1**
		IL, Io					√		√
	BI1								
S1		IL, Io	√	√		√	√		√
S2		IL, Io	√	√		√	√	√	√
	BI1								
S3		IL, Io	√	√		√	√		√
S4		IL, Io	√			√	√	√	√
BI2	BI1		√			√	√	√	√

Table 3-14: Trip and I/O logic - AQ110P SS3a

AQ101S – SS12:

L>	I> (ext.)	I/O Description	Trip Description
	BI3	✓ Binary input 1.	✓ Signal inputs: BI3 (I>) from incomer feeder AQ110P-SS3a HSO1.
S1	BI3	✓ Sensor channel 1. ✓ Monitoring outgoing cable compartment.	✓ Trip criteria: I> + L>. ✓ Trip outputs: T1 (outgoing CB), T3 (Trip alarm). ✓ Signal outputs: BO1 (L>) to incomer unit AQ110P-SS3a after CBFP setting time.
S2	BI3	✓ Sensor channel 2. ✓ Monitoring CB compartment.	✓ Trip criteria: I> + L>. ✓ Trip outputs: N/A. ✓ Signal outputs: BO1 (L>) to incomer unit AQ110P-SS3a BI2.
S4	BI3	✓ Sensor channel 4. ✓ Monitoring BB compartment.	✓ Trip criteria: I> + L>. ✓ Trip outputs: N/A. ✓ Signal outputs: BO1 (L>) to incomer unit AQ110P-SS3a BI2.

Table 3-15 Trip and I/O Description - AQ101S SS12

L>	I> (ext.)	T1	T2	T3	BO1
	BI3				
S1	BI3	√	√(CBFP)	√	√(CBFP)
S2	BI3				√
S4	BI3				√

Table 3-16 Trip and I/O Logic - AQ101S SS12

AQ101S – SS5:

L>	I> (ext.)	I/O Description	Trip Description
	BI3	✓ Binary input 3.	✓ Signal inputs: BI3 (I>) from incomer feeder AQ110P-SS3a HSO1 (Left Section Side).
	BI4	✓ Binary input 4.	✓ Signal inputs: BI4 (I>) from incomer feeder AQ110P-SS3a HSO1 (Right Section Side).
S1	BI3/ BI4	✓ Sensor channel 1. ✓ Monitoring BB compartment.	✓ Trip criteria: I> + L>. ✓ Trip outputs: T1 (tie breaker), T2 (not in use), T3 (Trip alarm). ✓ Signal outputs: BO1 (L>) to incomer unit AQ110P-SS3a BI2 (Left Section Side).
S2	BI3/ BI4	✓ Sensor channel 2. ✓ Monitoring tie breaker.	✓ Trip criteria: I> + L>. ✓ Trip outputs: T1 (tie breaker), T2 (not in use), T3 (Trip alarm). ✓ Signal outputs: BO1 (L>) to incomer unit AQ110P-SS3a BI2 (Left Section Side). BO3 (L>) to incomer unit AQ110P-SS3a BI2 (Right Section Side).
S3	BI3/ BI4	✓ Sensor channel 3. ✓ Monitoring BB compartment.	✓ Trip criteria: I> + L>. ✓ Trip outputs: T1 (tie breaker), T2 (not in use), T3 (Trip alarm). ✓ Signal outputs: BO3 (L>) to incomer unit AQ110P-SS3a BI2 (Right Section Side).
S4	BI3/ BI4	✓ Sensor channel 4. ✓ Monitoring BB compartment.	✓ Trip criteria: I> + L>. ✓ Trip outputs: T1 (tie breaker), T2 (not in use), T3 (Trip alarm). ✓ Signal outputs: BO3 (L>) to incomer unit AQ110P-SS3a BI2 (Right Section Side).
BI1		✓ Binary input 1.	✓ Trip criteria: MT. ✓ Trip outputs: T1 (tie breaker), T3 (Trip alarm). ✓ Signal inputs: BI1 (I>) from incomer feeder AQ110P-SS3a HSO2 (Left Section Side).
BI2		✓ Binary input 2.	✓ Trip criteria: MT. ✓ Trip outputs: T1 (tie breaker), T3 (Trip alarm). ✓ Signal inputs: BI2 (I>) from incomer feeder AQ110P-SS3a HSO2 (Right Section Side).

Table 3-17 Trip and I/O Description - AQ101S SS5

L>	I> (ext.)	T1	T2	T3	BO1	BO3
	BI3					
	BI4					
S1	BI3/BI4	√	√	√	√	
S2	BI3/BI4	√	√	√	√	√
S3	BI3/BI4	√	√	√		√
S4	BI3/BI4	√	√	√		√
BI1		√		√		
BI2		√		√		

Table 3-18 Trip and I/O Logic - AQ101S SS5

3.4.3. CONNECTIONS

AQ110P-SS3A (LEFT BUSBAR SECTION SIDE):

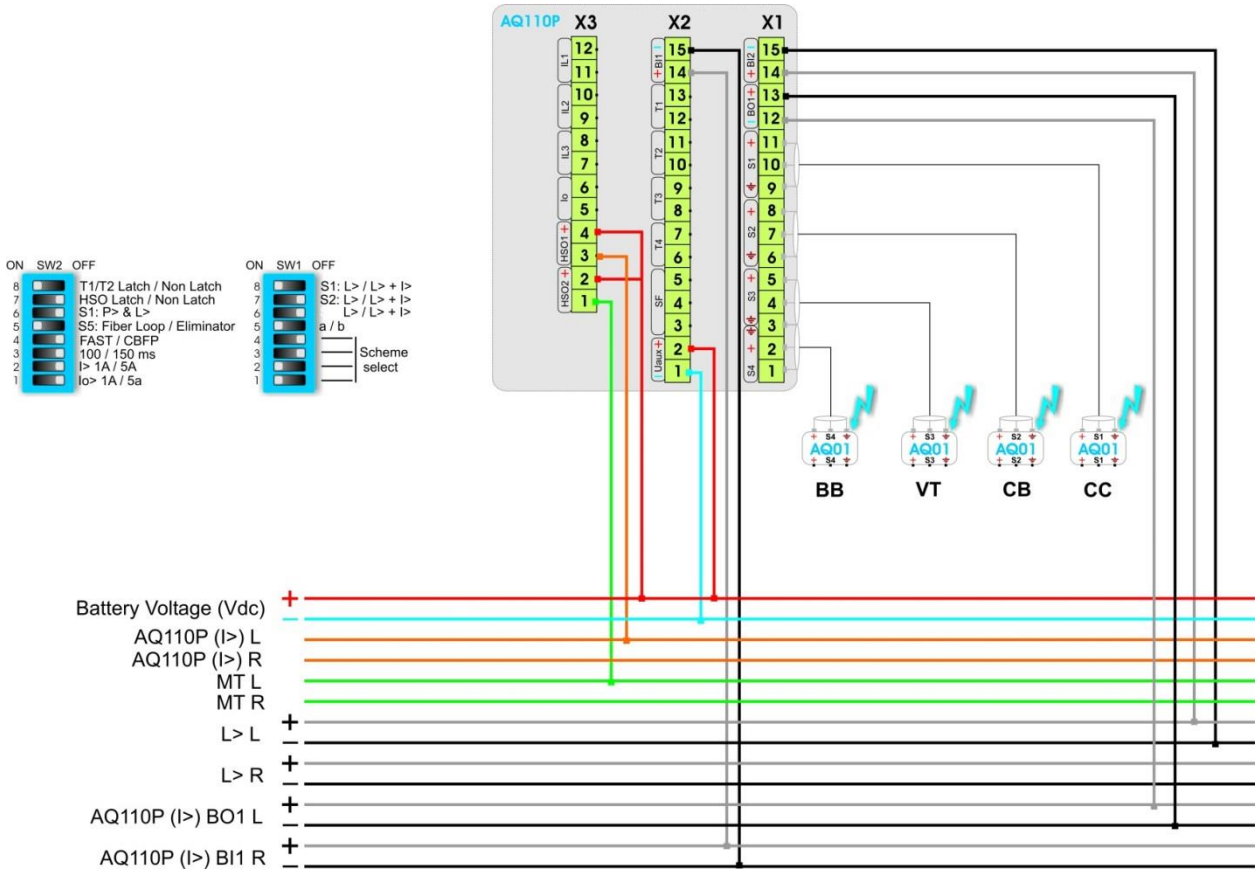

AQ101S-SS12 (Left Busbar Section Side):

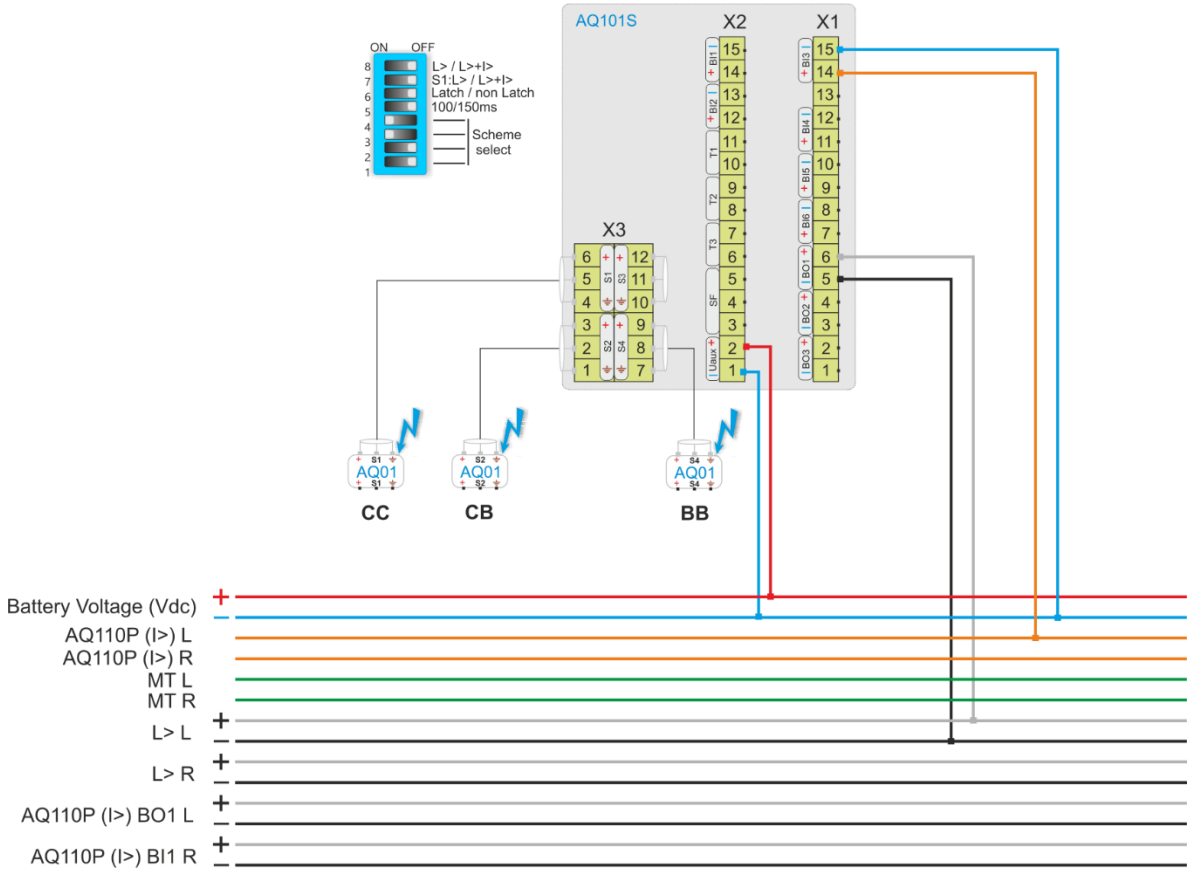

AQ101S-SS5:

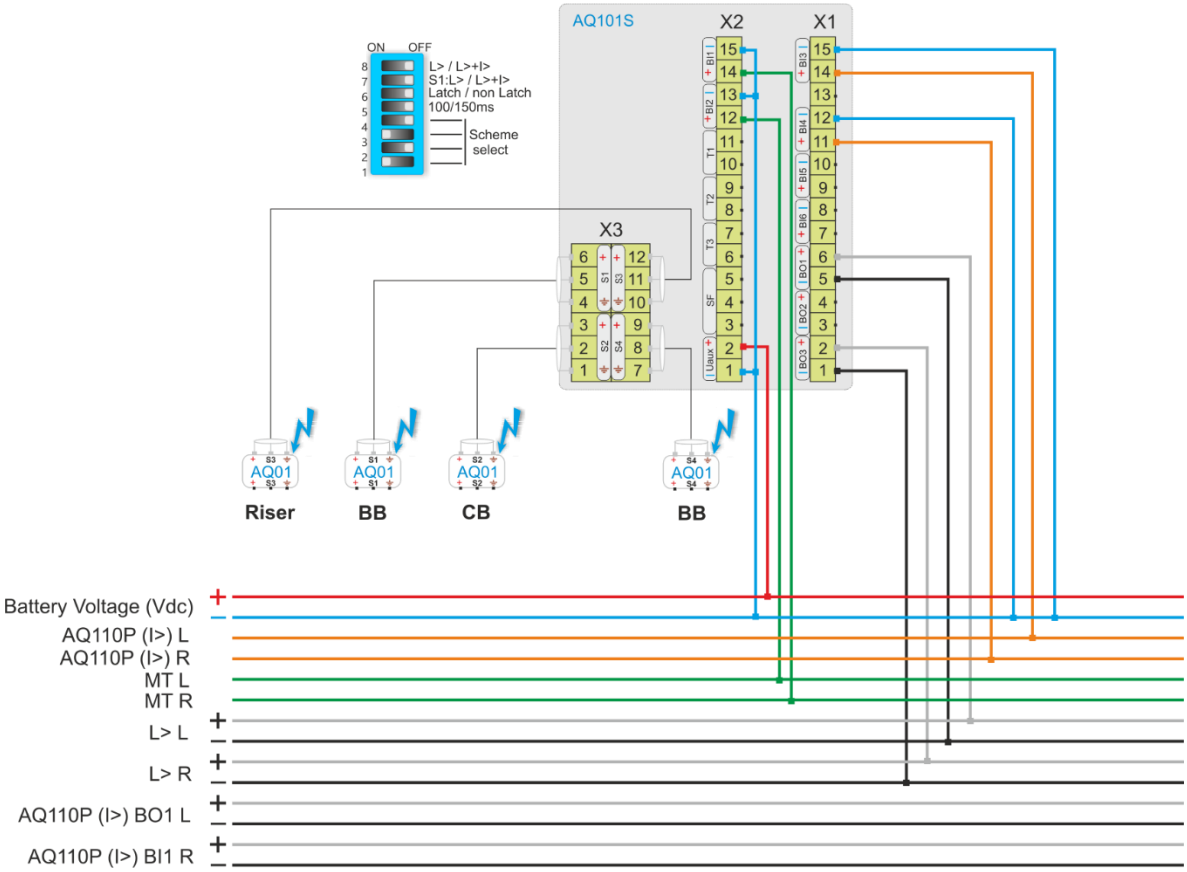
AQ101S
X2
X1
X3
ON
OFF
L> / L>+I>
S1:L> / L>+I>
Latch / non Latch
100/150ms
Scheme
select
AQ01
Riser
BB
CB
BB
Battery Voltage (Vdc)
AQ110P (I>) L
AQ110P (I>) R
MT L
MT R
L> L
L> R
AQ110P (I>) BO1 L
AQ110P (I>) BI1 R

AQ101S-SS12 (Right Busbar Section Side):

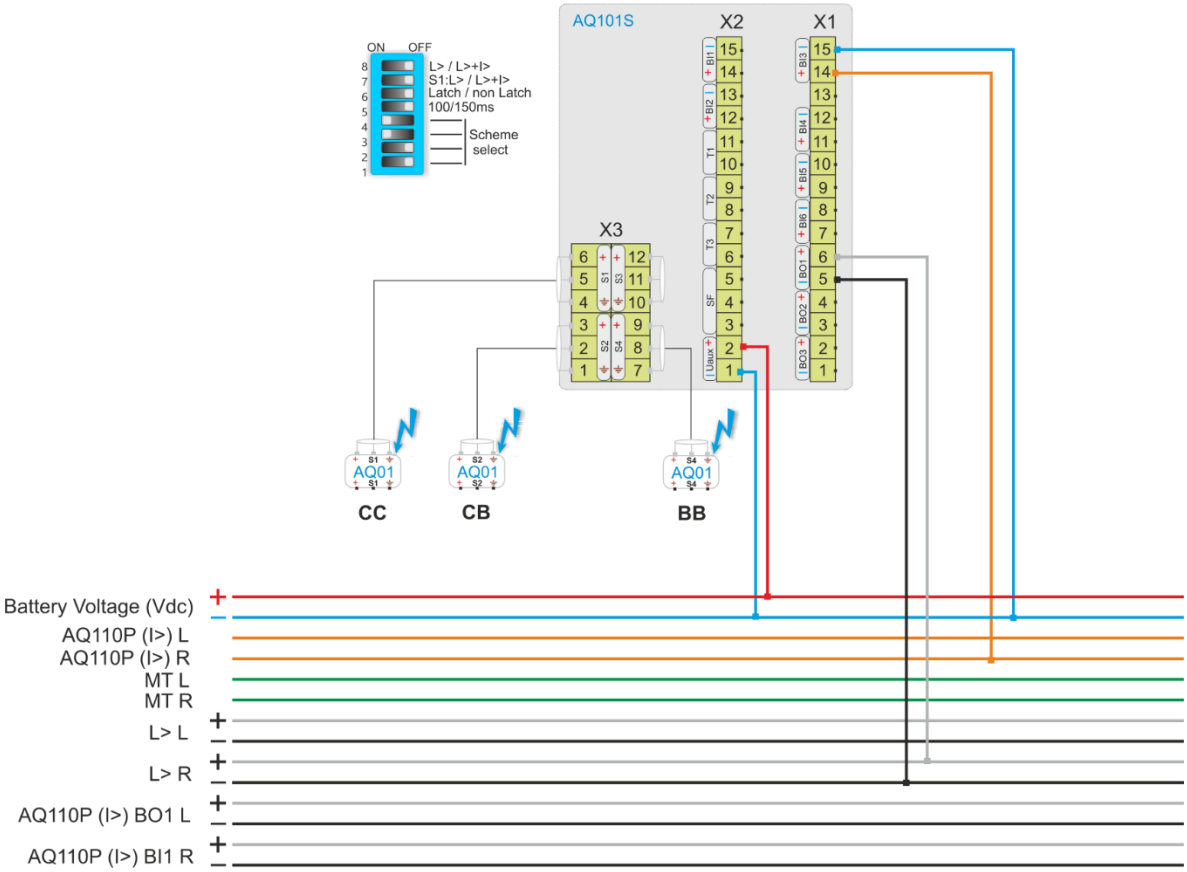

AQ110P-SS3A (RIGHT BUSBAR SECTION SIDE):

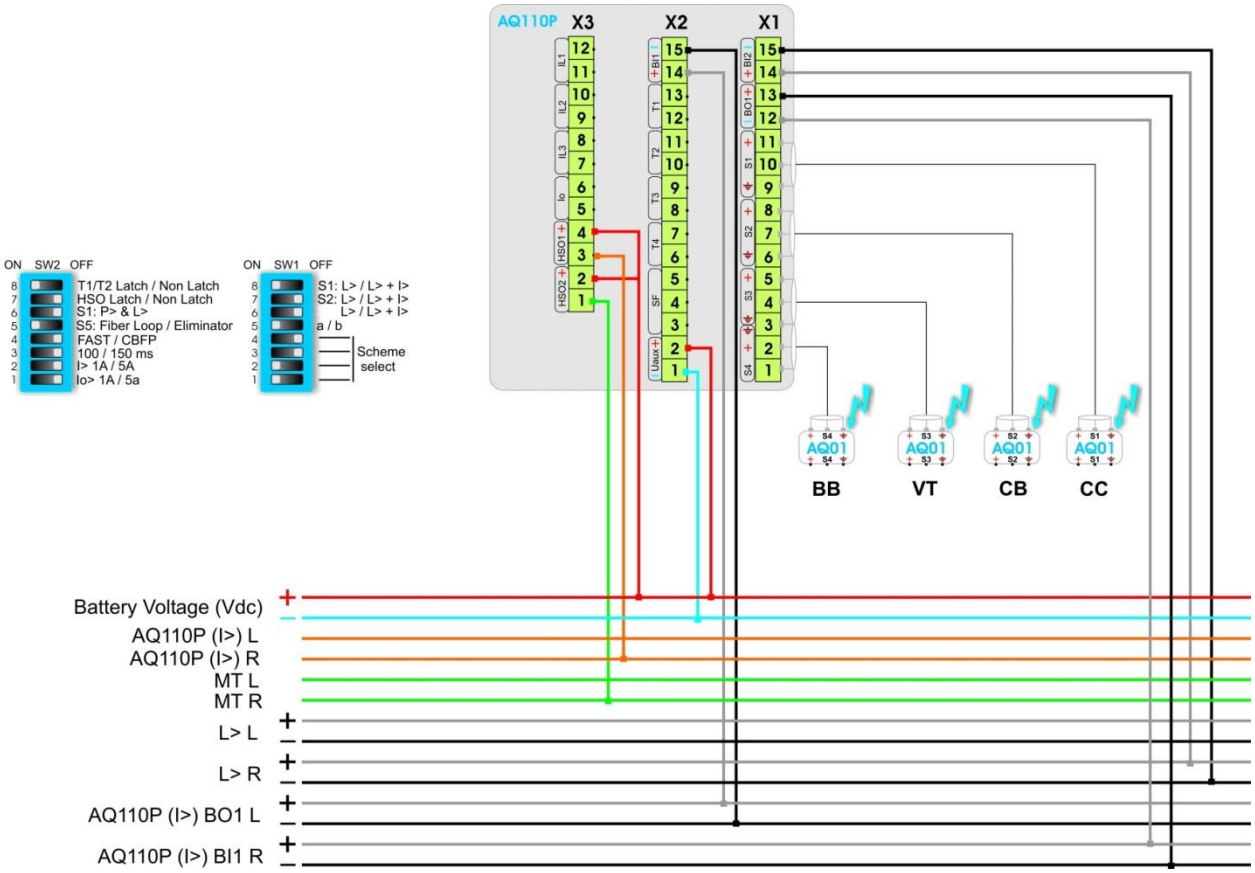

4. STANDALONE

4.1. ONE INCOMER (STANDALONE SCHEME 6A)

4.1.1. SCHEME CHARACTERISTICS

Scheme Selection Number	AQ110P – SS6a
Number of Incoming Feeders	1 x incoming feeder
Number of Outgoing Feeders	2 x outgoing feeders
Number of the Circuit Breakers	1 x incomer CBs; 2 x outgoing CBs
Selective Trip for Incoming Feeder CBs	YES
Selective Trip for Outgoing Feeder CBs	NO
Master Trip Function	NO
Units Applied	1 x AQ110P

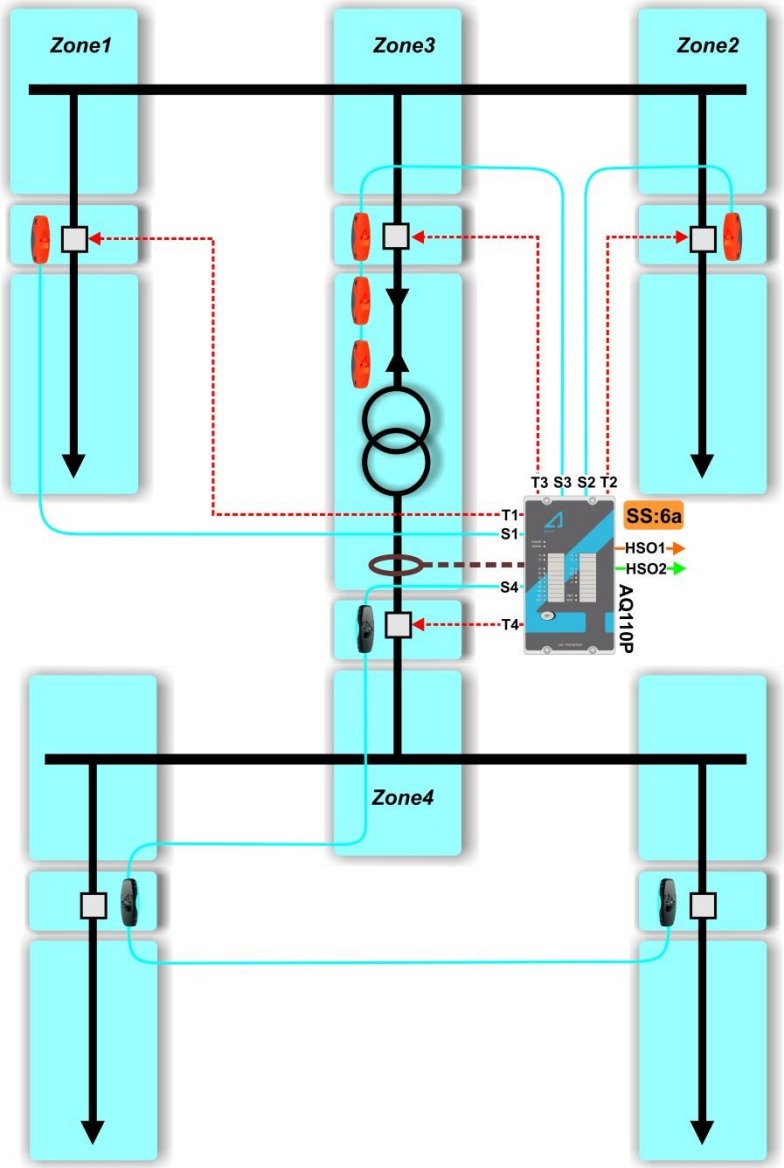

Figure 4-1 One Incomer (Standalone Scheme 6A)

4.1.2. I/O Description

AQ110P-SS6A:

L>	P>	I> (int.)	I/O Description	Trip Description
		IL, Io	✓ Current inputs Phase IL1, IL2, IL3 and E/F Io. ✓ Measuring current for incomer(s).	
S1			✓ Sensor channel 1. ✓ Zone 1 breaker compartment.	✓ Trip criteria: L> only. ✓ Trip outputs: T1 (Zone 1 breaker), T2 (Zone 2 breaker), T3(Zone 3 breaker). ✓ Signal outputs: HSO1 (Alarm) and BO1 (L>).
S1				✓ Trip criteria: L> +P>. ✓ Trip outputs: T1 (Zone 1 breaker), T2 (Zone2 breaker), T3(Zone 3), ✓ Signal outputs: HSO1 (Alarm) and BO1 (L>+P>).
S1		IL, Io		✓ Trip criteria: L> +I>. ✓ Trip outputs: T1 (Zone 1 breaker), T2 (Zone2 breaker), T3(Zone 3), ✓ Signal outputs: HSO1 (Alarm) and BO1 (L>+I>).
S2			✓ Sensor channel 2. ✓ Zone 2 breaker compartment.	✓ Trip criteria: L> only. ✓ Trip outputs: T1 (Zone 1 breaker), T2 (Zone 2 breaker), T3 (Zone 3 breaker). ✓ Signal outputs: HSO2 (Alarm) and BO1 (L>).
S2				✓ Trip criteria: L> +P>. ✓ Trip outputs: T1 (Zone 1 breaker), T2 (Zone2 breaker), T3(Zone 3), ✓ Signal outputs: HSO2 (Alarm) and BO1 (L>+P>).
S2		IL, Io		✓ Trip criteria: L> +I>. ✓ Trip outputs: T1 (Zone 1 breaker), T2 (Zone2 breaker), T3(Zone 3 breaker), ✓ Signal outputs: HSO2 (Alarm) and BO1 (L>+I>).

S3			✓ Sensor channel 3. ✓ Zone 3 breaker compartment and cable compartment.	✓ Trip criteria: L> only. ✓ Trip outputs: T1 (Zone 1 breaker), T2 (Zone 2 breaker), T3 (Zone 3 breaker), T4 (Zone 4 breaker). ✓ Signal outputs: BO1 (L>).
S3				✓ Trip criteria: L> + P>. ✓ Trip outputs: T1 (Zone 1 breaker), T2 (Zone 2 breaker), T3 (Zone 3 breaker), T4 (Zone 4 breaker). ✓ Signal outputs: BO1 (L> + P>).
S3		IL, Io		✓ Trip criteria: L> + I>. ✓ Trip outputs: T1 (Zone 1 breaker), T2 (Zone 2 breaker), T3 (Zone 3 breaker), T4 (Zone 4 breaker). ✓ Signal outputs: BO1 (L> + I>).
S4			✓ Sensor channel 4. ✓ Zone 4 breaker compartment and outgoing feeder breaker compartment	✓ Trip criteria: L> only. ✓ Trip outputs: T1 (Zone 1 breaker), T2 (Zone 2 breaker), T3 (Zone 3 breaker), T4 (Zone 4 breaker) ✓ Signal outputs: BO1 (L>).
S4				✓ Trip criteria: L> + P>. ✓ Trip outputs: T1 (Zone 1 breaker, T2 (Zone 2 breaker, T3 (Zone 3 breaker, T4 (Zone 4 breaker. ✓ Signal outputs: BO1 (L> + P>).
S4		IL, Io		✓ Trip criteria: L> + I>. ✓ Trip outputs: T1 (Zone 1 breaker), T2 (Zone 2 breaker), T3 (Zone 3 breaker), T4 (Zone 4 breaker). ✓ Signal outputs: BO1 (L> + I>).

Table 4-1 Trip and I/O Description - AQ110P SS6a

Inputs			Outputs						
L>	**P>**	**I> (int.)**	**T1**	**T2**	**T3**	**T4**	**HSO1**	**HSO2**	**BO1**
S1			√ (*CBFP)	√ (**CBFP)	√ (**CBFP)		√ (*CBFP)		√ (*CBFP)
S1			√ (*FAST)	√ (*CBFP)	√ (*CBFP)		√ (*FAST)		√ (*FAST)
S1		IL, Io	√ (*FAST)	√ (*CBFP)	√ (*CBFP)		√ (*FAST)		√ (*FAST)
S2			√ (**CBFP)	√ (*CBFP)	√ (**CBFP)			√ (*CBFP)	√ (*CBFP)
S2			√ (*CBFP)	√ (*FAST)	√ (*CBFP)			√ (*FAST)	√ (*FAST)
S2		IL, Io	√ (*CBFP)	√ (*FAST)	√ (*CBFP)			√ (*FAST)	√ (*FAST)
S3			√ (**CBFP)	√ (**CBFP)	√ (*CBFP)	√ (*CBFP)			√ (*CBFP)
S3			√ (*CBFP)	√ (*CBFP)	√ (*FAST)	√ (*FAST)			√ (*FAST)
S3		IL, Io	√ (*CBFP)	√ (*CBFP)	√ (*FAST)	√ (*FAST)			√ (*FAST)
S4			√ (*CBFP)	√ (*CBFP)	√ (*FAST)	√ (*FAST)			√ (*FAST)
S4			√ (*CBFP)	√ (*CBFP)	√ (*FAST)	√ (*FAST)			√ (*FAST)
S4		IL, Io	√ (*CBFP)	√ (*CBFP)	√ (*FAST)	√ (*FAST)			√ (*FAST)

Table 4-2 Trip and I/O logic - AQ110P SS6a

***FAST: Trip time is less than 7ms.**

***CBFP: One CBFP setting time of dipswitch DIPSW2/3.**

****CBFP: Two CBFP setting time of dipswitch DIPSW2/3.**

4.1.3. Connections

AQ110P-SS6a:

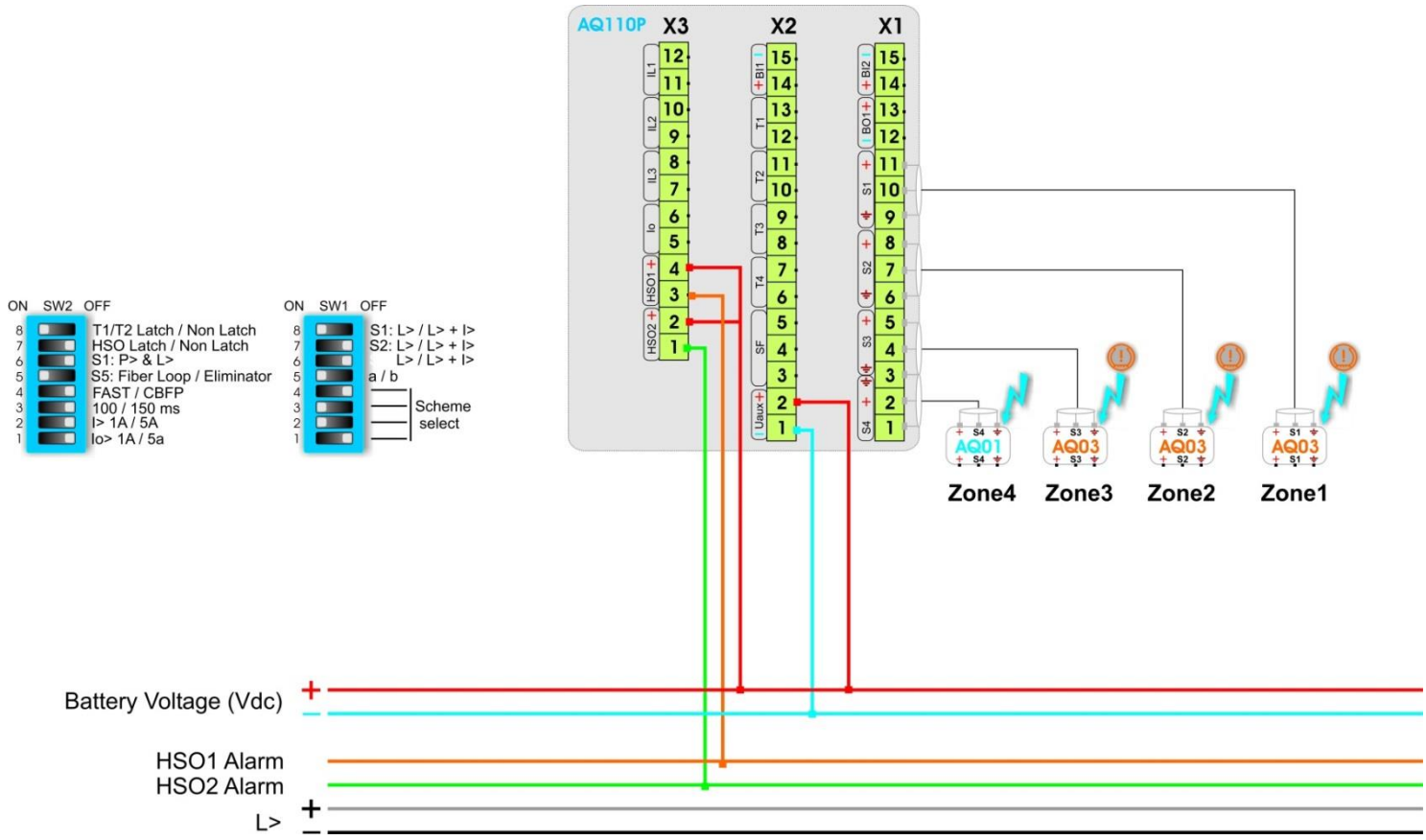

4.1.4. Sensor in Use

AQ01 – Detect Arc Light, enable to wire three same sensors in a chain.

AQ03 – Detect Arc Light + Pressure, criteria of activation is light only or light + pressure.

5. MULTI INCOMERS WITHOUT BREAKER

5.1. MULTI INCOMERS WITHOUT TIE BREAKER (AQ110P-SS4A)

5.1.1. SCHEME CHARACTERISTICS

Scheme Selection Number	AQ110P – SS2a; AQ110P – SS4a; AQ101 – SS1
Number of Incoming Feeders	N x incoming feeders
Number of Outgoing Feeders	M x outgoing feeders
Number of the Circuit Breakers	N x incomer CBs; M x outgoing CBs
Selective Trip for Incoming Feeder CBs	YES
Selective Trip for Outgoing Feeder CBs	YES
Master Trip Function	YES
Units Applied	N x AQ110P; M x AQ101

N: 2 to 6; M: 1 to 20.

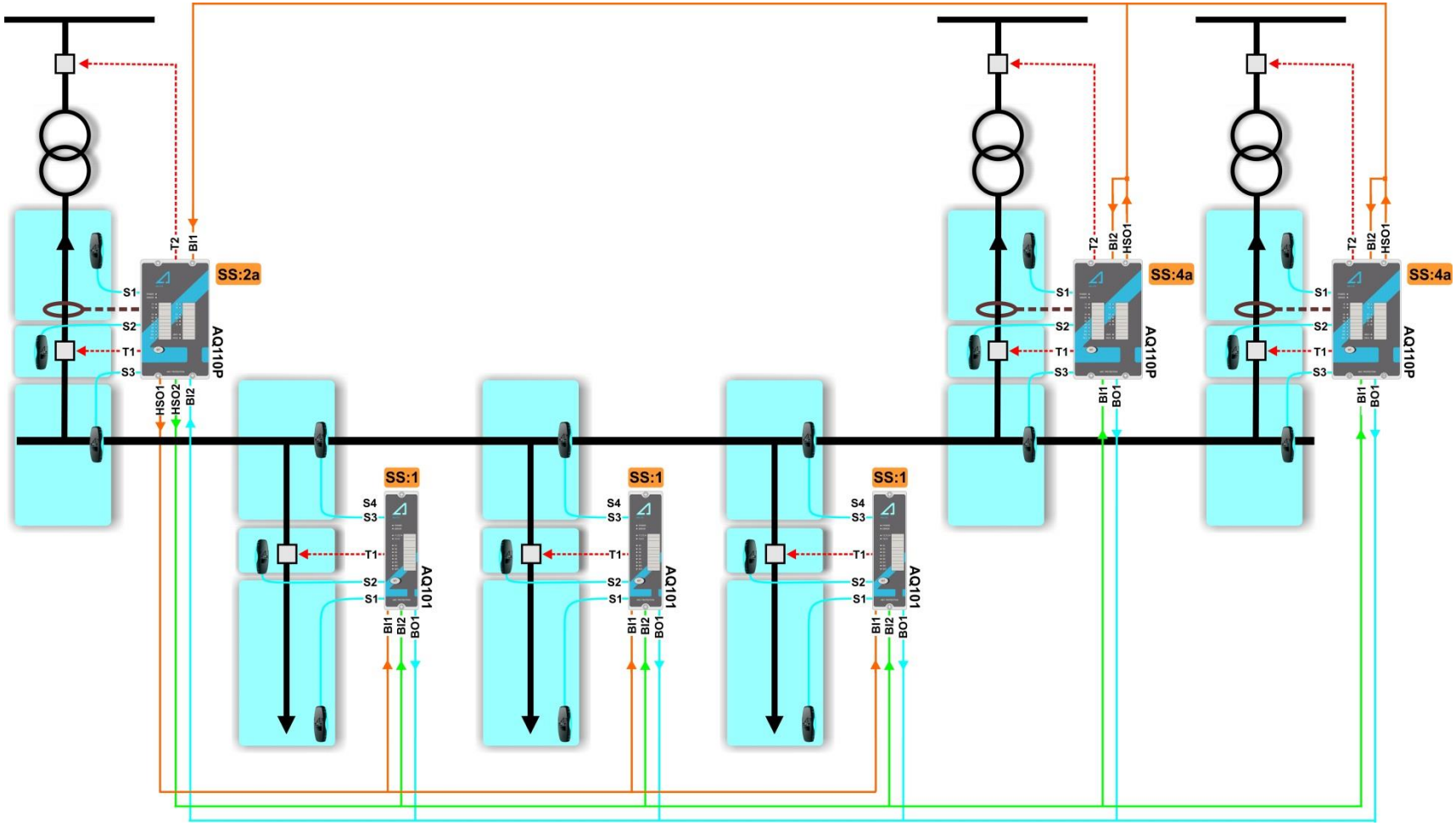

Figure 5-1 Multi Incomers without Tie Breaker

5.1.2. I/O DESCRIPTION

AQ110P – SS2A:

L>	I> (ext.)	I> (int.)	I/O Description	Trip Description
		IL, Io	✓ Current inputs Phase IL1, IL2, IL3 and E/F Io. ✓ Measuring current for incomer(s).	✓ Signal outputs: HSO1 (I>) to outgoing units AQ101-SS1 input BI1.
	BI1		✓ Binary input 1.	✓ Signal outputs: HSO1 (I>) to outgoing units AQ101-SS1 input BI1. ✓ Signal inputs: I> from incomer unit AQ110P-SS4a output HSO1.
S1			✓ Sensor channel 1. ✓ Monitoring incoming cable compartment.	✓ Trip criteria: L> only. ✓ Trip outputs: T1 (incomer CB), T2 (upstream CB (HV side)), T4 (trip alarm).
S2		IL, Io	✓ Sensor channel 2. ✓ Monitoring incoming circuit breaker compartment.	✓ Trip criteria: I> + L>. ✓ Trip outputs: T1 (incomer CB), T2 (upstream CB (HV side)), T3 (not in use), T4 (trip alarm). ✓ Signal outputs: HSO2 (MT) to incomer unit AQ110P-SS4a input BI1 and outgoing units AQ101-SS1 input BI2.
	BI1			
S3/S4		IL, Io	✓ Sensor channel 3/4. ✓ Monitoring busbar compartment.	✓ Trip criteria: I> + L>. ✓ Trip outputs: T1 (incomer CB), T3 (not in use), T4 (trip alarm). ✓ Signal outputs: HSO2 (MT) to incomer unit AQ110P-SS4a input BI1 and outgoing units AQ101-SS1 input BI2.
	BI1			
BI2		IL, Io	✓ Binary input 2.	✓ Trip criteria: I> + L> ✓ Trip outputs: T1 (incomer CB), T3 (not in use), T4 (trip alarm). ✓ Signal outputs: HSO2 (MT) to incomer unit AQ110P-SS4a input BI1 and outgoing unit AQ101-SS1 input BI2. ✓ Signal inputs: BI2 (L>) from outgoing units AQ101-SS1 output BO1 and incomer unit AQ110P-SS4a output BO1.
	BI1			

Table 5-1: Trip and I/O Description - AQ110P SS2a

Inputs			Outputs						
L>	**I> (ext.)**	**I> (int.)**	**T1**	**T2**	**T3**	**T4**	**HSO1 (I>)**	**HSO2 (MT)**	**BO1**
		IL, Io					√		√
	BI1								
S1			√	√		√			
S2		IL, Io	√	√	√	√	√	√	√
	BI1								
S3		IL, Io	√		√	√	√	√	√
	BI1								
S4		IL, Io	√		√	√	√	√	√
	BI1								
BI2		IL, Io	√		√	√	√	√	√
	BI1								

Table 5-2: Trip and I/O logic - AQ110P SS2a

AQ110P – SS4A:

L>	I> (ext.)	I> (int.)	I/O Description	Trip Description
		IL, Io	✓ Current inputs Phase IL1, IL2, IL3 and E/F Io. ✓ Measuring current for incomer(s).	✓ Signal outputs: HSO1 (I>) to incomer unit AQ110P-SS2a input BI1.
	BI2		✓ Binary input 2.	✓ Signal outputs: HSO1 (I>) to incomer unit AQ110P-SS2a input BI1 and incomer unit AQ110P-SS4a. ✓ Signal inputs: I> from incomer unit AQ110P-SS4a output HSO1.
S1			✓ Sensor channel 1. ✓ Monitoring incoming cable compartment.	✓ Trip criteria: L> only. ✓ Trip outputs: T1 (incomer CB), T2 (upstream CB (HV side)), T4 (trip alarm).
S2		IL, Io	✓ Sensor channel 2. ✓ Monitoring incoming circuit breaker compartment.	✓ Trip criteria: I> + L>. ✓ Trip outputs: T1 (incomer CB), T2 (upstream CB (HV side)), T3 (not in use), T4 (trip alarm). ✓ Signal outputs: BO1 (L>) to incomer unit AQ110P-SS2a input BI2. ✓ Signal inputs: MT from incomer unit AQ110P-SS2a output HSO2.
	BI2			
S3/S4		IL, Io	✓ Sensor channel 3/4. ✓ Monitoring busbar compartment.	✓ Trip criteria: I> + L>. ✓ Trip outputs: T1 (incomer CB), T3 (not in use), T4 (trip alarm). ✓ Signal outputs: BO1 (L>) to incomer unit AQ110P-SS2a input BI2. ✓ Signal inputs: MT from incomer unit AQ110P-SS2a output HSO2.
	BI2			
BI1			✓ Binary input 1.	✓ Trip criteria: I> + L>. ✓ Trip outputs: T1 (incomer CB), T3 (not in use), T4 (trip alarm). ✓ Signal inputs: MT from incomer unit AQ110P-SS2a output HSO2.

Table 5-3: Trip and I/O Description - AQ110P SS4a

Inputs			Outputs						
L>	**I> (ext.)**	**I> (int.)**	**T1**	**T2**	**T3**	**T4**	**HSO1 (I>)**	**HSO2 (MT)**	**BO1 (L>)**
S1			√	√		√			
S2		IL, Io	√	√	√	√	√		√
	BI2								
S3		IL, Io	√		√	√	√		√
	BI2								
S4		IL, Io	√		√	√	√		√
	BI2								
BI1		IL, Io	√(MT)		√(MT)	√(MT)			
	BI2								

Table 5-4: Trip and I/O Logic - AQ110P SS4a

AQ101-SS1:

L>	I> (ext.)	I/O Description	Trip Description
	BI1	✓ Binary input 1.	✓ Signal inputs: BI1 (I>) from incomer unit AQ110P-SS2a output HSO1.
S1	BI1	✓ Sensor channel 1. ✓ Monitoring outgoing cable compartment.	✓ Trip criteria: I> + L>. ✓ Trip outputs: T1 (outgoing CB), T3 (not in use), T4 (trip alarm). ✓ Signal outputs: BO1 (L>) to incomer unit AQ110P-SS2a after CBFP setting time.
S2	BI1	✓ Sensor channel 2. ✓ Monitoring outgoing circuit breaker compartment.	✓ Trip criteria: I> + L>. ✓ Trip outputs: T2 (CBFP), T4 (CBFP). ✓ Signal outputs: BO1 (L>) to incomer unit AQ110P-SS2a input BI2. ✓ Signal inputs: BI2 (MT) from incomer unit AQ110P-SS2a output HSO2.
S3/S4	BI1	✓ Sensor channel 3/4. ✓ Monitoring busbar compartment.	✓ Trip criteria: I> + L>. ✓ Trip outputs: T2 (CBFP), T4 (CBFP). ✓ Signal outputs: BO1 (L>) to incomer unit AQ110P-SS2a input BI2. ✓ Signal inputs: BI2 (MT) from incomer unit AQ110P-SS2a output HSO2.
BI2		✓ Binary input 2.	✓ Trip criteria: I> + L>. ✓ Trip outputs: T1 (outgoing CB), T2 (not in use), T3 (not in use), T4 (trip alarm). ✓ Signal inputs: BI2 (MT) from incomer unit AQ110P-SS2a output HSO2.

Table 5-5: Trip and I/O Description - AQ101 SS1

Inputs		Outputs				
L>	**I> (ext.)**	**T1**	**T2**	**T3**	**T4**	**BO1**
	BI1					
S1	BI1	√	√(CBFP)	√	√	√(CBFP)
S2	BI1		√(CBFP)		√(CBFP)	√
S3	BI1		√(CBFP)		√(CBFP)	√
S4	BI1		√(CBFP)		√(CBFP)	√
BI2		√(MT)	√(CBFP)	√(MT)	√(MT)	

Table 5-6: Trip and I/O Logic - AQ101-SS1

5.1.3. CONNECTIONS

AQ110P-SS2A:

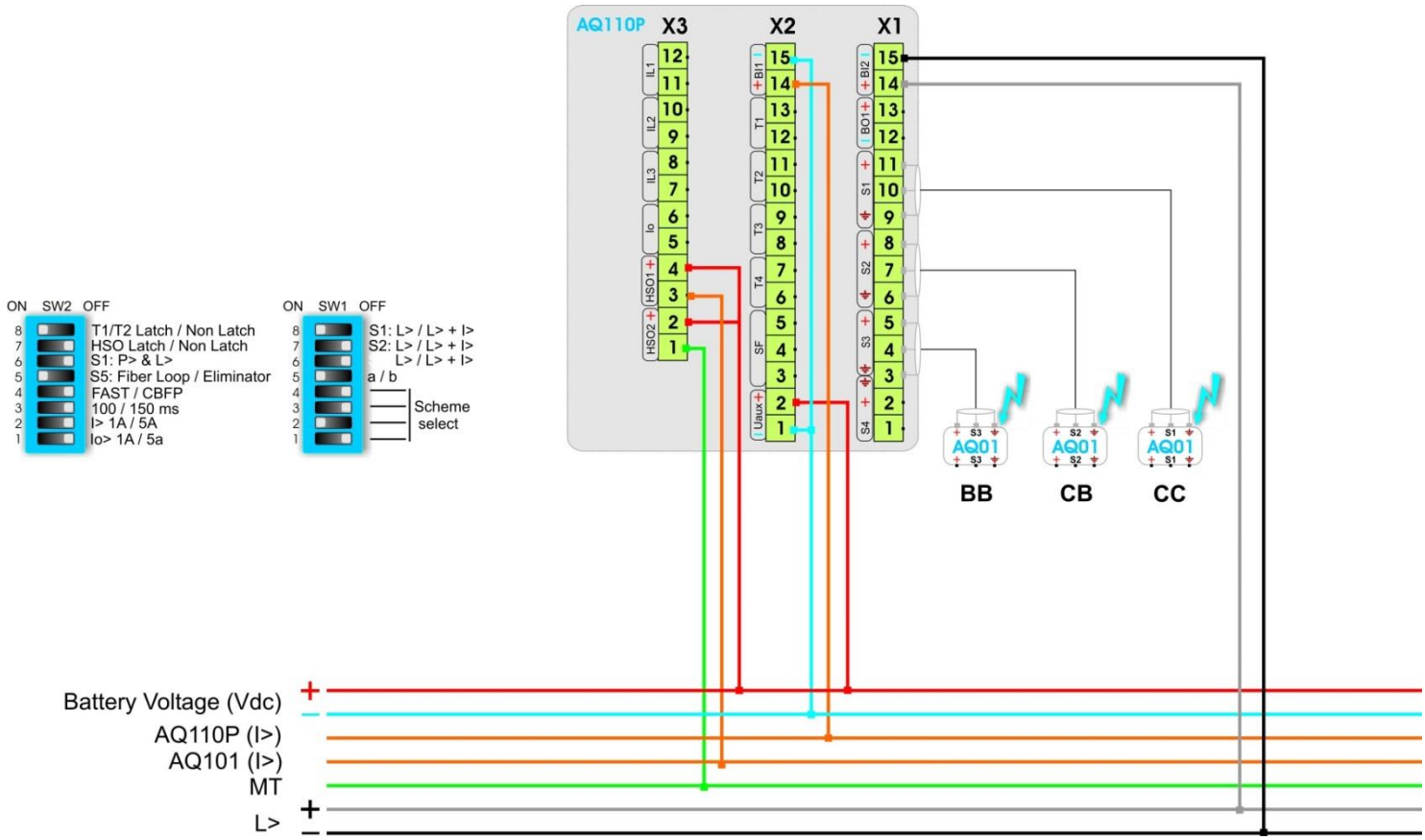

AQ110P-SS4A:

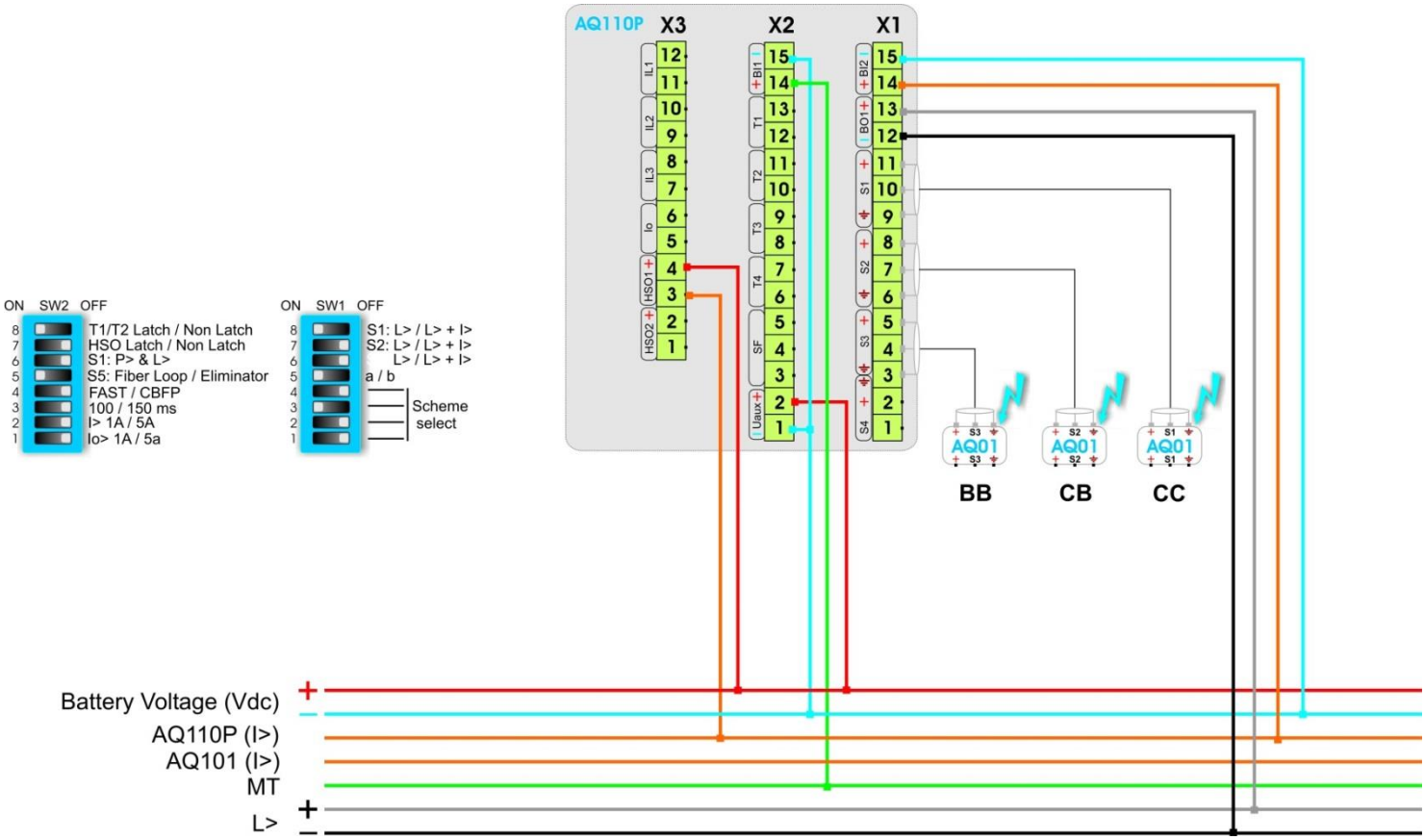
AQ110P
X3
X2
X1
ON SW2 OFF
T1/T2 Latch / Non Latch
HSO Latch / Non Latch
S1: P> & L>
S5: Fiber Loop / Eliminator
FAST / CBFP
100 / 150 ms
I> 1A / 5A
Io> 1A / 5a
ON SW1 OFF
S1: L> / L> + I>
S2: L> / L> + I>
L> / L> + I>
a / b
Scheme select
AQ01
BB
CB
CC
Battery Voltage (Vdc)
AQ110P (I>)
AQ101 (I>)
MT
L>

AQ101-SS1:

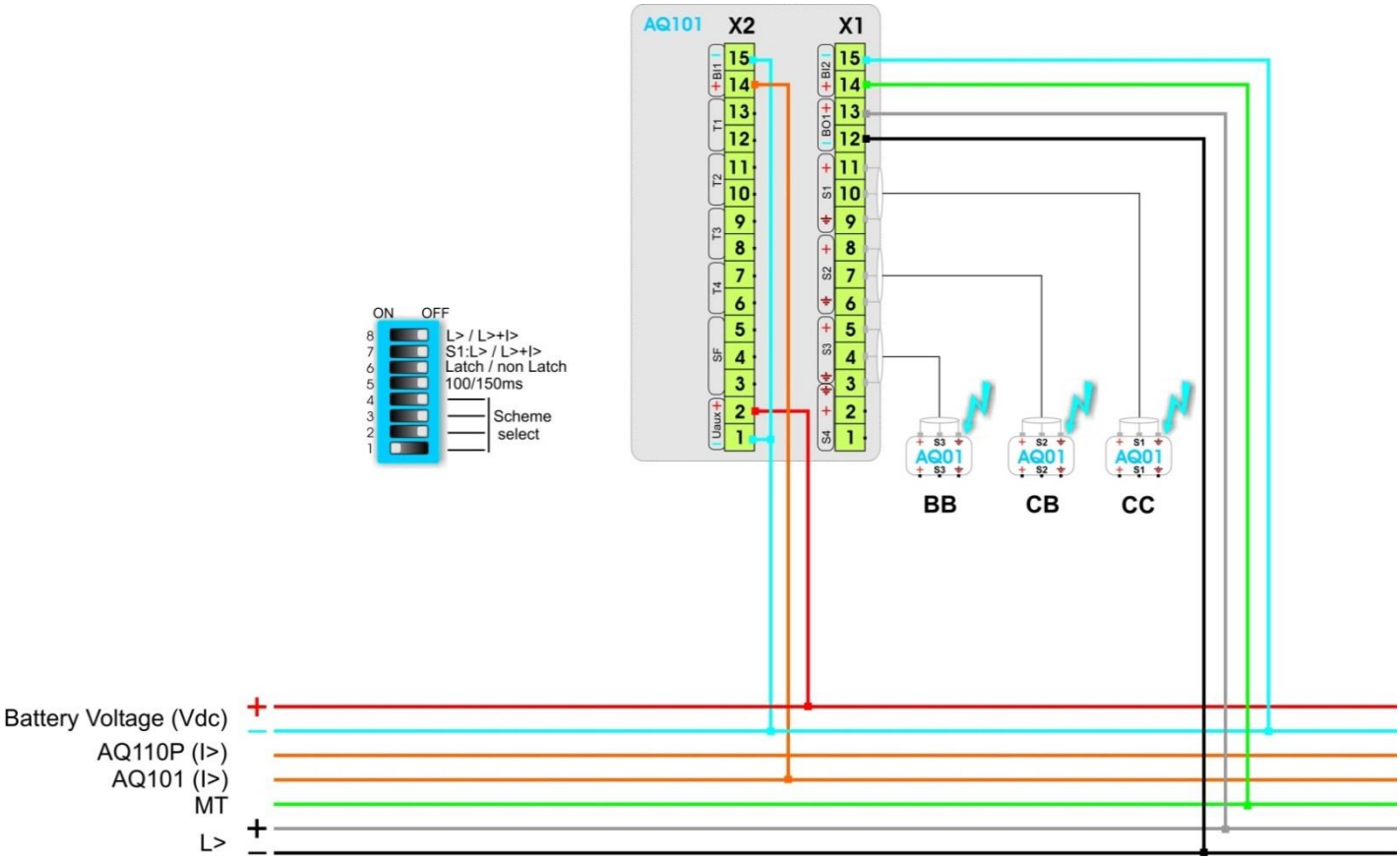
AQ101
X2
X1
ON
OFF
L> / L>+I>
S1:L> / L>+I>
Latch / non Latch
100/150ms
Scheme
select
AQ01
BB
CB
CC
Battery Voltage (Vdc)
AQ110P (I>)
AQ101 (I>)
MT
L>

6. MULTI INCOMERS WITH TIE BREAKER

6.1. MULTI INCOMERS WITH TIE BREAKER

6.1.1. SCHEME CHARACTERISTICS

Scheme Selection Number	AQ110P – SS2a; AQ110P – SS7a; AQ101 – SS1
Number of Incoming Feeders	N x incoming feeders
Number of Outgoing Feeders	M x outgoing feeders
Number of the Circuit Breakers	N x incomer CBs; M x outgoing CBs
Selective Trip for Incoming Feeder CBs	YES
Selective Trip for Outgoing Feeder CBs	YES
Master Trip Function	YES
Units Applied	N x AQ110P; M x AQ101

N: 2 to 6; M: 1 to 20.

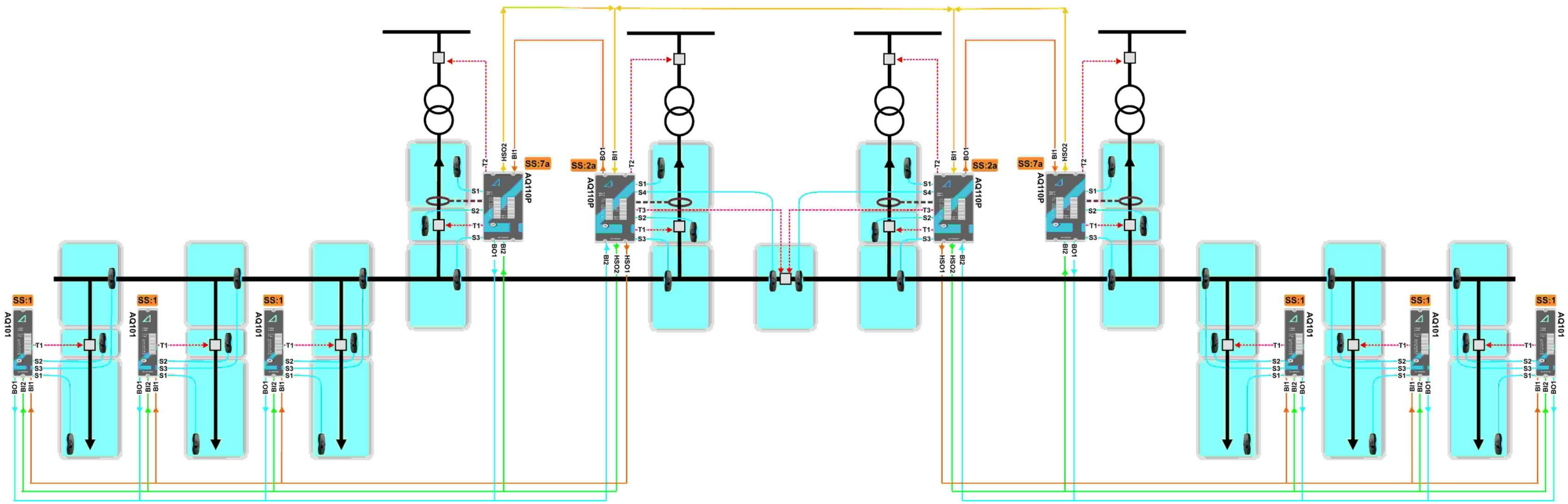

Figure 6-1 Multi Incomers with Tie Breaker

6.1.2. I/O Description

AQ110P – SS2a (LS):

L>	I> (ext.)	I> (int.)	I/O Description	Trip Description
		IL, Io	✓ Current inputs Phase IL1, IL2, IL3 and E/F Io. ✓ Measuring current for incomer(s).	✓ Signal outputs: HSO1 (I>) to outgoing units AQ101-SS1 input BI1. BO1 (I>) to incomer units AQ110P-SS7a(LS) input BI1.
	BI1		✓ Binary input 1.	✓ Signal outputs: HSO1 (I>) to outgoing units AQ101-SS1 input BI1. ✓ Signal inputs: I> from incomer units AQ110P-SS7a(LS & RS) output HSO2.
S1			✓ Sensor channel 1. ✓ Monitoring incoming cable compartment.	✓ Trip criteria: L> only. ✓ Trip outputs: T1 (incomer CB), T2 (upstream CB (HV side)), T4 (trip alarm).
S2		IL, Io	✓ Sensor channel 2. ✓ Monitoring incoming circuit breaker compartment.	✓ Trip criteria: I> + L>. ✓ Trip outputs: T1 (incomer CB), T2 (upstream CB (HV side)), T3 (tie breaker), T4 (trip alarm). ✓ Signal outputs: HSO2 (MT) to incomer unit AQ110P-SS7a(LS) input BI2 and outgoing units AQ101-SS1(LS) input BI2.
	BI1			
S3/S4		IL, Io	✓ Sensor channel 3/4. ✓ Monitoring busbar compartment.	✓ Trip criteria: I> + L>. ✓ Trip outputs: T1 (incomer CB), T3 (tie breaker), T4 (trip alarm). ✓ Signal outputs: HSO2 (MT) to incomer unit AQ110P-SS7a(LS) input BI2 and outgoing units AQ101-SS1(LS) input BI2.
	BI1			
BI2		IL, Io	✓ Binary input 2.	✓ Trip criteria: I> + L>. ✓ Trip outputs: T1 (incomer CB), T3 (tie breaker), T4 (trip alarm). ✓ Signal outputs: HSO2 (MT) to incomer unit AQ110P-SS7a(LS) input BI2 and outgoing unit AQ101-SS1(LS) input BI2. ✓ Signal inputs: BI2 (L>) from outgoing units AQ101-SS1(LS) output BO1 and incomer unit AQ110P-SS7a(LS) output BO1.
	BI1			

Table 6-1: Trip and I/O Description - AQ110P SS2a (LS)

Inputs				Outputs						
L>	**I> (int.)**	**I> (ext. LS)**	**I> (ext. RS)**	**T1**	**T2**	**T3**	**T4**	**HSO1 (I>)**	**HSO2 (MT)**	**BO1**
	IL, Io							√		√
		BI1						√		
			BI1					√		
S1				√	√		√			
S2	IL, Io			√	√	√	√	√	√	√
		BI1		√	√	√	√	√	√	
			BI1	√	√	√	√	√	√	
S3	IL, Io			√		√	√	√	√	√
		BI1		√		√	√	√	√	
			BI1	√		√	√	√	√	
S4	IL, Io			√		√	√	√	√	√
		BI1		√		√	√	√	√	
			BI1	√		√	√	√	√	
BI2	IL, Io			√		√	√	√	√	√
		BI1		√		√	√	√	√	
			BI1	√		√	√	√	√	

Table 6-2: Trip and I/O logic - AQ110P SS2a (LS)

AQ110P – SS7A (LS):

L>	I> (ext.)	I> (int.)	I/O Description	Trip Description
		IL, Io	✓ Current inputs Phase IL1, IL2, IL3 and E/F Io. ✓ Measuring current for incomer(s).	✓ Signal outputs: HSO2 (I>) to incomer units AQ110P-SS2a(LS & RS) input BI1.
	BI1		✓ Binary input 1.	✓ Signal outputs: HSO2 (I>) to incomer units AQ110P-SS2a(LS & RS) input BI1. ✓ Signal inputs: (I>) from incomer unit AQ110P-SS2a(LS) output BO1.
S1			✓ Sensor channel 1. ✓ Monitoring incoming cable compartment.	✓ Trip criteria: L> only. ✓ Trip outputs: T1 (incomer CB), T2 (upstream CB (HV side)), T4 (trip alarm).
S2		IL, Io	✓ Sensor channel 2. ✓ Monitoring incoming circuit breaker compartment.	✓ Trip criteria: I> + L>. ✓ Trip outputs: T1 (incomer CB), T2 (upstream CB (HV side)), T3 (not in use), T4 (trip alarm). ✓ Signal outputs: BO1 (L>) to incomer unit AQ110P-SS2a(LS) input BI2. ✓ Signal inputs: MT from incomer unit AQ110P-SS2a(LS) output HSO2.
	BI1			
S3/S4		IL, Io	✓ Sensor channel 3/4. ✓ Monitoring busbar compartment.	✓ Trip criteria: I> + L>. ✓ Trip outputs: T1 (incomer CB), T3 (not in use), T4 (trip alarm). ✓ Signal outputs: BO1 (L>) to incomer unit AQ110P-SS2a(LS) input BI2. ✓ Signal inputs: MT from incomer unit AQ110P-SS2a(LS) output HSO2.
	BI1			
BI2			✓ Binary input 2.	✓ Trip criteria: I> + L>. ✓ Trip outputs: T1 (incomer CB), T3 (not in use), T4 (trip alarm). ✓ Signal inputs: MT from incomer unit AQ110P-SS2a(LS) output HSO2.

Table 6-3: Trip and I/O Description - AQ110P SS7a (LS)

Inputs			Outputs						
L>	**I> (ext. LS)**	**I> (int.)**	**T1**	**T2**	**T3**	**T4**	**HSO1 (int. I>)**	**HSO2 (ext. I>)**	**BO1 (L>)**
		IL, Io					√	√	
	BI1							√	
S1			√	√		√			
S2		IL, Io	√	√	√	√	√	√	√
	BI1		√	√	√	√		√	√
S3		IL, Io	√		√	√	√	√	√
	BI1		√		√	√		√	√
S4		IL, Io	√		√	√	√	√	√
	BI1		√		√	√		√	√
BI2		IL, Io	√(MT)		√(MT)	√(MT)	√	√	
	BI1							√	

Table 6-4: Trip and I/O Logic - AQ110P SS7a (LS)

AQ101-SS1 (LS):

L>	I> (ext.)	I/O Description	Trip Description
	BI1	✓ Binary input 1.	✓ Signal inputs: BI1 (I>) from incomer unit AQ110P-SS2a(LS) output HSO1.
S1	BI1	✓ Sensor channel 1. ✓ Monitoring outgoing cable compartment.	✓ Trip criteria: I> + L>. ✓ Trip outputs: T1 (outgoing CB), T3 (not in use), T4 (trip alarm). ✓ Signal outputs: BO1 (L>) to incomer unit AQ110P-SS2a(LS) after CBFP setting time.
S2	BI1	✓ Sensor channel 2. ✓ Monitoring outgoing circuit breaker compartment.	✓ Trip criteria: I> + L>. ✓ Trip outputs: T2 (CBFP), T4 (CBFP). ✓ Signal outputs: BO1 (L>) to incomer unit AQ110P-SS2a(LS) input BI2. ✓ Signal inputs: BI2 (MT) from incomer unit AQ110P-SS2a(LS) output HSO2.
S3/S4	BI1	✓ Sensor channel 3/4. ✓ Monitoring busbar compartment.	✓ Trip criteria: I> + L>. ✓ Trip outputs: T2 (CBFP), T4 (CBFP). ✓ Signal outputs: BO1 (L>) to incomer unit AQ110P-SS2a(LS) input BI2. ✓ Signal inputs: BI2 (MT) from incomer unit AQ110P-SS2a(LS) output HSO2.
BI2		✓ Binary input 2.	✓ Trip criteria: I> + L>. ✓ Trip outputs: T1 (outgoing CB), T2 (CBFP), T3 (not in use), T4 (trip alarm). ✓ Signal inputs: BI2 (MT) from incomer unit AQ110P-SS2a(LS) output HSO2.

Table 6-5: Trip and I/O Description - AQ101 SS1 (LS)

Inputs		Outputs				
L>	**I> (ext.)**	**T1**	**T2**	**T3**	**T4**	**BO1**
	BI1					
S1	BI1	√	√(CBFP)	√	√	√(CBFP)
S2	BI1		√(CBFP)		√(CBFP)	√
S3	BI1		√(CBFP)		√(CBFP)	√
S4	BI1		√(CBFP)		√(CBFP)	√
BI2		√(MT)	√(CBFP)	√(MT)	√(MT)	

Table 6-6: Trip and I/O Logic - AQ101-SS1 (LS)

AQ110P – SS2A (RS):

L>	I> (ext.)	I> (int.)	I/O Description	Trip Description
		IL, Io	✓ Current inputs Phase IL1, IL2, IL3 and E/F Io. ✓ Measuring current for incomer(s).	✓ Signal outputs: HSO1 (I>) to outgoing units AQ101-SS1(RS) input BI1. BO1 (I>) to incomer units AQ110P-SS7a(RS) input BI1.
	BI1		✓ Binary input 1.	✓ Signal outputs: HSO1 (I>) to outgoing units AQ101-SS1(RS) input BI1. ✓ Signal inputs: I> from incomer units AQ110P-SS7a(LS & RS) output HSO2.
S1			✓ Sensor channel 1. ✓ Monitoring incoming cable compartment.	✓ Trip criteria: L> only. ✓ Trip outputs: T1 (incomer CB), T2 (upstream CB (HV side)), T4 (trip alarm).
S2		IL, Io	✓ Sensor channel 2. ✓ Monitoring incoming circuit breaker compartment.	✓ Trip criteria: I> + L>. ✓ Trip outputs: T1 (incomer CB), T2 (upstream CB (HV side)), T3 (tie breaker), T4 (trip alarm). ✓ Signal outputs: HSO2 (MT) to incomer unit AQ110P-SS7a(RS) input BI2 and outgoing units AQ101-SS1(RS) input BI2.
	BI1			
S3/S4		IL, Io	✓ Sensor channel 3/4. ✓ Monitoring busbar compartment.	✓ Trip criteria: I> + L>. ✓ Trip outputs: T1 (incomer CB), T3 (tie breaker), T4 (trip alarm). ✓ Signal outputs: HSO2 (MT) to incomer unit AQ110P-SS7a(RS) input BI2 and outgoing units AQ101-SS1(RS) input BI2.
	BI1			
BI2		IL, Io	✓ Binary input 2.	✓ Trip criteria: I> + L> ✓ Trip outputs: T1 (incomer CB), T3 (tie breaker), T4 (trip alarm). ✓ Signal outputs: HSO2 (MT) to incomer unit AQ110P-SS7a(RS) input BI2 and outgoing unit AQ101-SS1(RS) input BI2. ✓ Signal inputs: BI2 (L>) from outgoing units AQ101-SS1(RS) output BO1 and incomer unit AQ110P-SS7a(RS) output BO1.
	BI1			

Table 6-7: Trip and I/O Description - AQ110P SS2a (RS)

Inputs				Outputs						
L>	**I> (int.)**	**I> (ext. RS)**	**I> (ext. LS)**	**T1**	**T2**	**T3**	**T4**	**HSO1 (I>)**	**HSO2 (MT)**	**BO1**
	IL, Io							√		√
		BI1						√		
			BI1					√		
S1				√	√		√			
S2	IL, Io			√	√	√	√	√	√	√
		BI1		√	√	√	√	√	√	
			BI1	√	√	√	√	√	√	
S3	IL, Io			√		√	√	√	√	√
		BI1		√		√	√	√	√	
			BI1	√		√	√	√	√	
S4	IL, Io			√		√	√	√	√	√
		BI1		√		√	√	√	√	
			BI1	√		√	√	√	√	
BI2	IL, Io			√		√	√	√	√	√
		BI1		√		√	√	√	√	
			BI1	√		√	√	√	√	

Table 6-8: Trip and I/O logic - AQ110P SS2a (RS)

AQ110P – SS7A (LS):

L>	I> (ext.)	I> (int.)	I/O Description	Trip Description
		IL, Io	✓ Current inputs Phase IL1, IL2, IL3 and E/F Io. ✓ Measuring current for incomer(s).	✓ Signal outputs: HSO2 (I>) to incomer units AQ110P-SS2a(LS & RS) input BI1.
	BI1		✓ Binary input 1.	✓ Signal outputs: HSO2 (I>) to incomer units AQ110P-SS2a(LS & RS) input BI1. ✓ Signal inputs: (I>) from incomer unit AQ110P-SS2a(RS) output BO1.
S1			✓ Sensor channel 1. ✓ Monitoring incoming cable compartment.	✓ Trip criteria: L> only. ✓ Trip outputs: T1 (incomer CB), T2 (upstream CB (HV side)), T4 (trip alarm).
S2		IL, Io	✓ Sensor channel 2. ✓ Monitoring incoming circuit breaker compartment.	✓ Trip criteria: I> + L>. ✓ Trip outputs: T1 (incomer CB), T2 (upstream CB (HV side)), T3 (not in use), T4 (trip alarm). ✓ Signal outputs: BO1 (L>) to incomer unit AQ110P-SS2a(RS) input BI2. ✓ Signal inputs: MT from incomer unit AQ110P-SS2a(RS) output HSO2.
	BI1			
S3/S4		IL, Io	✓ Sensor channel 3/4. ✓ Monitoring busbar compartment.	✓ Trip criteria: I> + L>. ✓ Trip outputs: T1 (incomer CB), T3 (not in use), T4 (trip alarm). ✓ Signal outputs: BO1 (L>) to incomer unit AQ110P-SS2a(RS) input BI2. ✓ Signal inputs: MT from incomer unit AQ110P-SS2a(RS) output HSO2.
	BI1			
BI2			✓ Binary input 2.	✓ Trip criteria: I> + L>. ✓ Trip outputs: T1 (incomer CB), T3 (not in use), T4 (trip alarm). ✓ Signal inputs: MT from incomer unit AQ110P-SS2a(RS) output HSO2.

Table 6-9: Trip and I/O Description - AQ110P SS7a (RS)

Inputs			Outputs						
L>	**I> (ext. RS)**	**I> (int.)**	**T1**	**T2**	**T3**	**T4**	**HSO1 (int. I>)**	**HSO2 (ext. I>)**	**BO1 (L>)**
		IL, Io					√	√	
	BI1							√	
S1			√	√		√			
S2		IL, Io	√	√	√	√	√	√	√
	BI1		√	√	√	√		√	√
S3		IL, Io	√		√	√	√	√	√
	BI1		√		√	√		√	√
S4		IL, Io	√		√	√	√	√	√
	BI1		√		√	√		√	√
BI2		IL, Io	√(MT)		√(MT)	√(MT)	√	√	
	BI1							√	

Table 6-10: Trip and I/O Logic - AQ110P SS7a (RS)

AQ101-SS1 (LS):

L>	I> (ext.)	I/O Description	Trip Description
	BI1	✓ Binary input 1.	✓ Signal inputs: BI1 (I>) from incomer unit AQ110P-SS2a(LS) output HSO1.
S1	BI1	✓ Sensor channel 1. ✓ Monitoring outgoing cable compartment.	✓ Trip criteria: I> + L>. ✓ Trip outputs: T1 (outgoing CB), T3 (not in use), T4 (trip alarm). ✓ Signal outputs: BO1 (L>) to incomer unit AQ110P-SS2a(RS) after CBFP setting time.
S2	BI1	✓ Sensor channel 2. ✓ Monitoring outgoing circuit breaker compartment.	✓ Trip criteria: I> + L>. ✓ Trip outputs: T2 (CBFP), T4 (CBFP). ✓ Signal outputs: BO1 (L>) to incomer unit AQ110P-SS2a(RS) input BI2. ✓ Signal inputs: BI2 (MT) from incomer unit AQ110P-SS2a(RS) output HSO2.
S3/S4	BI1	✓ Sensor channel 3/4. ✓ Monitoring busbar compartment.	✓ Trip criteria: I> + L>. ✓ Trip outputs: T2 (CBFP), T4 (CBFP). ✓ Signal outputs: BO1 (L>) to incomer unit AQ110P-SS2a(RS) input BI2. ✓ Signal inputs: BI2 (MT) from incomer unit AQ110P-SS2a(RS) output HSO2.
BI2		✓ Binary input 2.	✓ Trip criteria: I> + L>. ✓ Trip outputs: T1 (outgoing CB), T2 (CBFP), T3 (not in use), T4 (trip alarm). ✓ Signal inputs: BI2 (MT) from incomer unit AQ110P-SS2a(RS) output HSO2.

Table 6-11: Trip and I/O Description - AQ101 SS1 (RS)

Inputs		Outputs				
L>	**I> (ext.)**	**T1**	**T2**	**T3**	**T4**	**BO1**
	BI1					
S1	BI1	√	√(CBFP)	√	√	√(CBFP)
S2	BI1		√(CBFP)		√(CBFP)	√
S3	BI1		√(CBFP)		√(CBFP)	√
S4	BI1		√(CBFP)		√(CBFP)	√
BI2		√(MT)	√(CBFP)	√(MT)	√(MT)	

Table 6-12: Trip and I/O Logic - AQ101-SS1 (RS)

6.1.3. CONNECTIONS

AQ110P-SS2A (LS & RS):

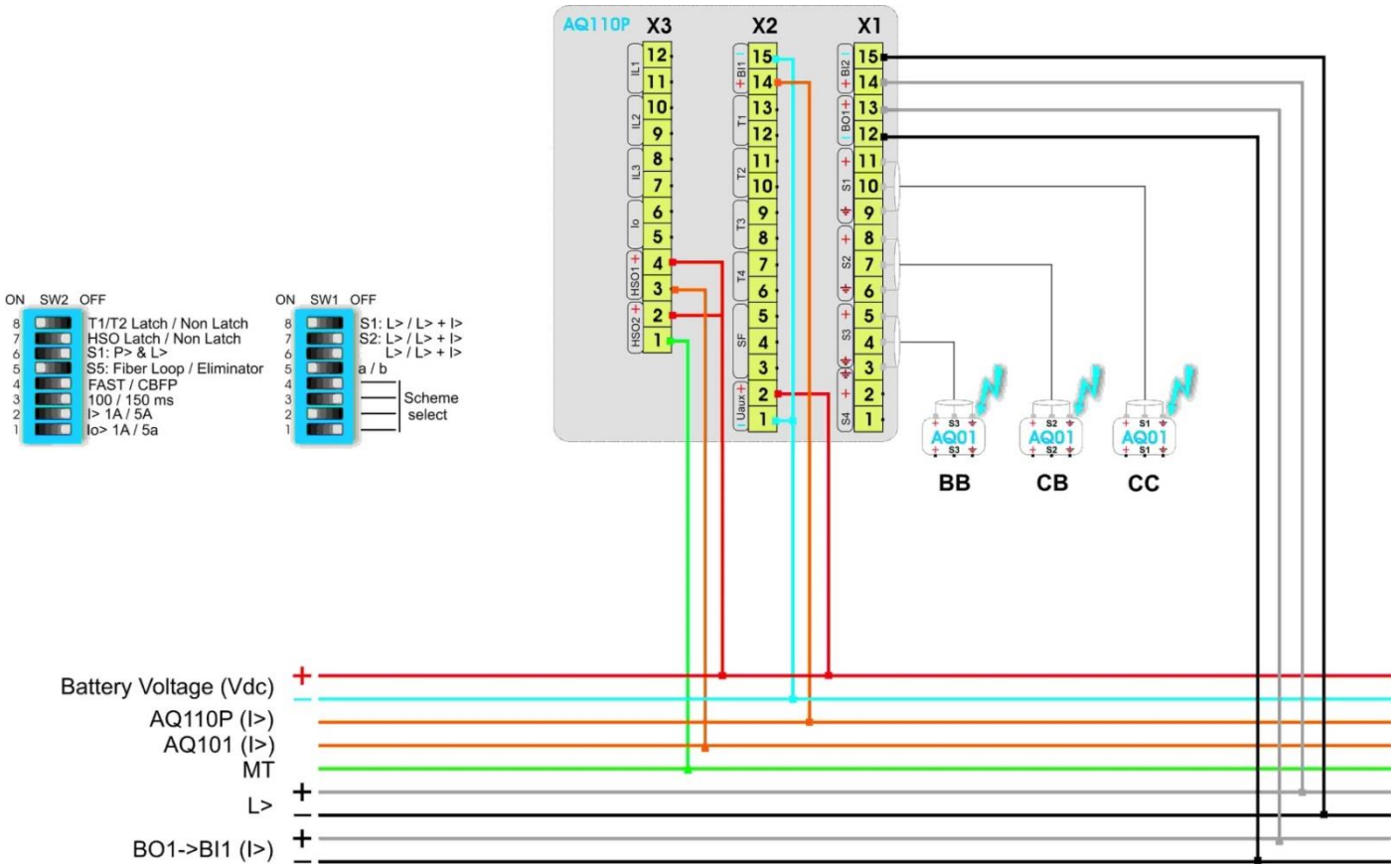

AQ110P-SS7A (LS & RS):

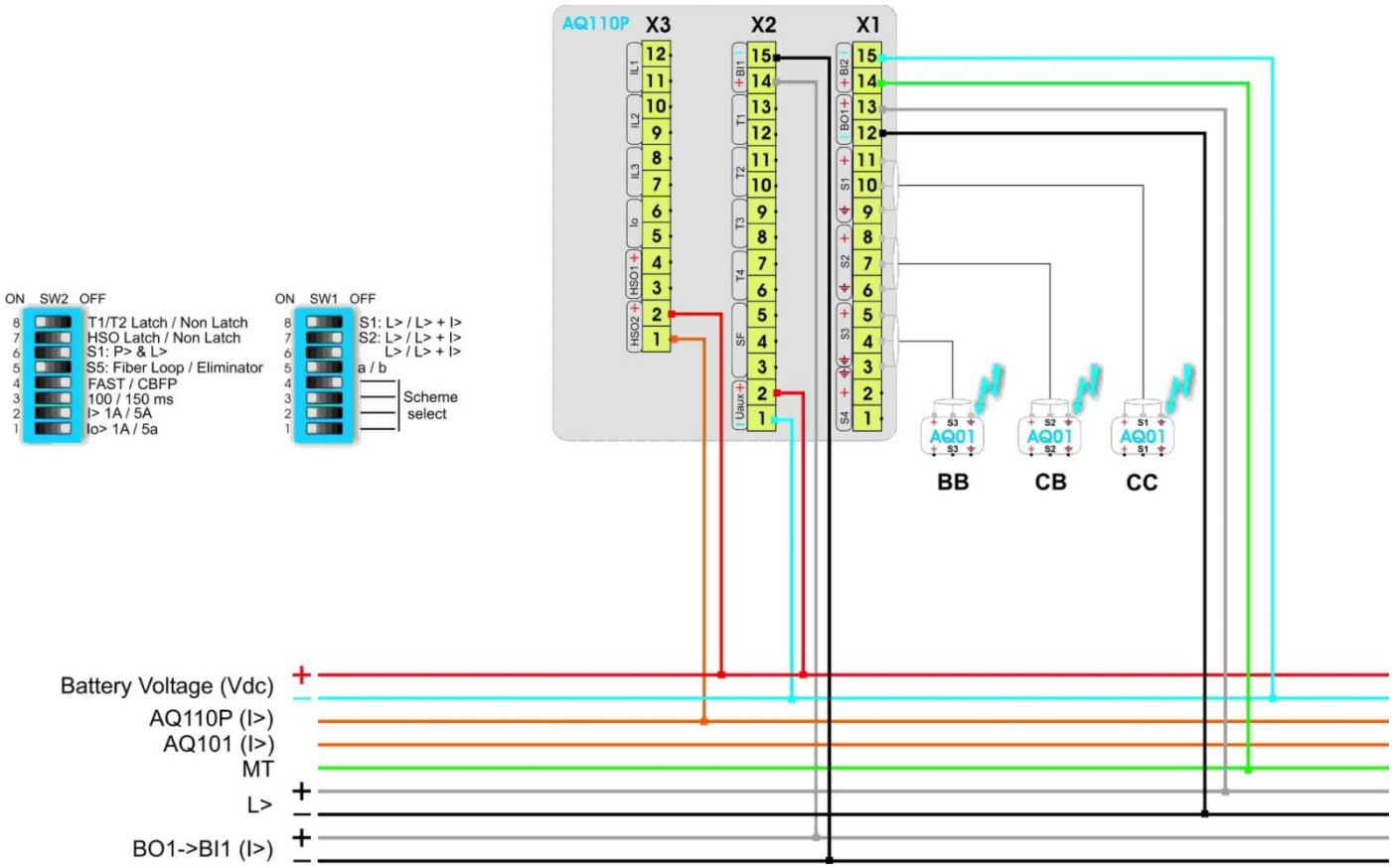

AQ101-SS1 (LS & RS):

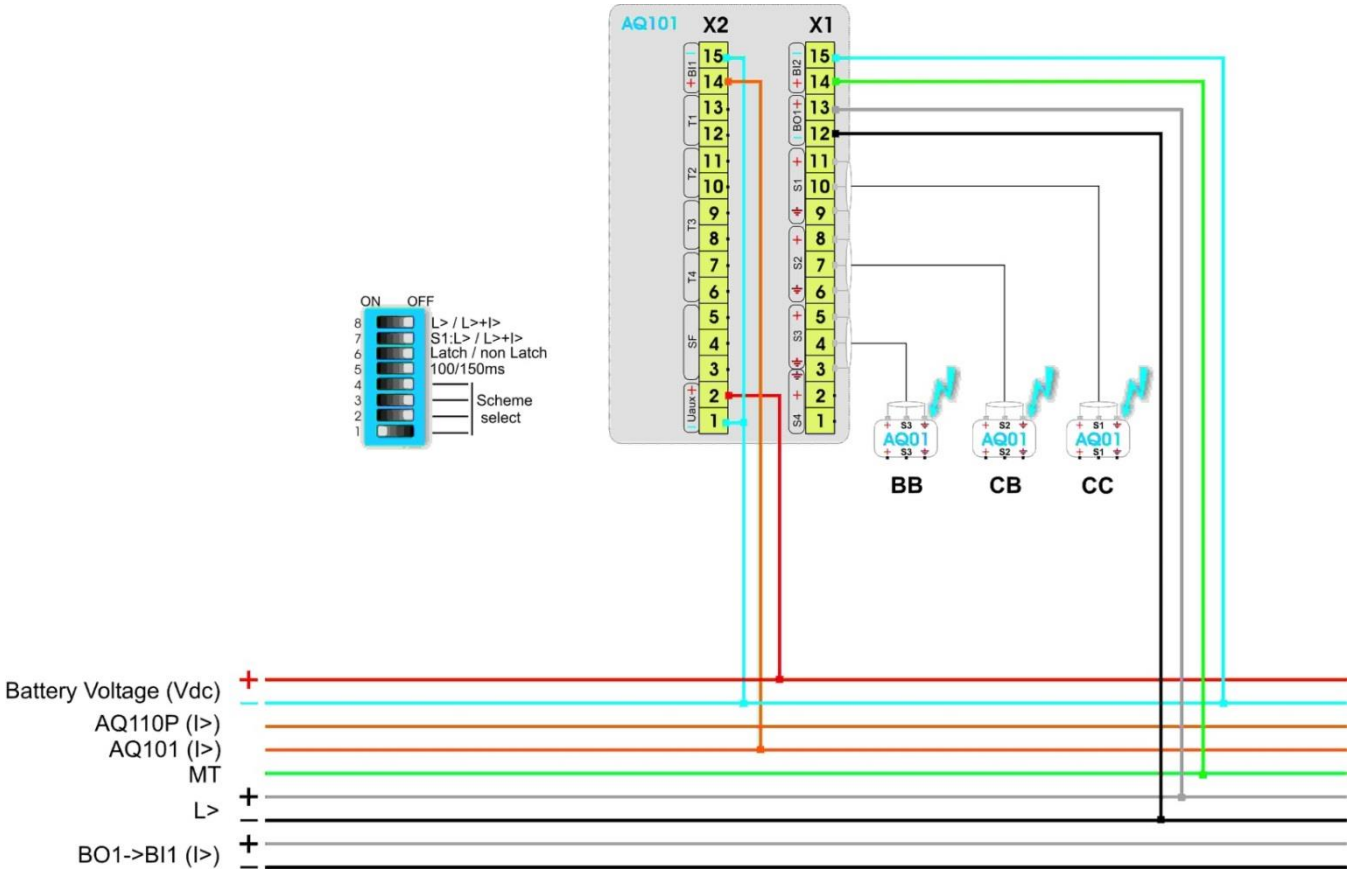
AQ101
X2
X1
ON
OFF
L> / L>+I>
S1:L> / L>+I>
Latch / non Latch
100/150ms
Scheme
select
AQ01
BB
CB
CC
Battery Voltage (Vdc)
AQ110P (I>)
AQ101 (I>)
MT
L>
BO1->BI1 (I>)

7. Multi Sections Schemes

7.1. Multi Sections Schemes – Single Incomer per Section

7.1.1. Scheme characteristics

Scheme Selection Number	AQ110P – SS2a; AQ101 – SS1
Number of Incoming Feeders	N x incoming feeders
Number of Outgoing Feeders	M x outgoing feeders
Number of the Circuit Breakers	N x incomer CBs; M x outgoing CBs
Number of the Tie Breakers	N-1 x tie breakers
Selective Trip for Incoming Feeder CBs	YES
Selective Trip for Outgoing Feeder CBs	YES
Master Trip Function	YES
Units Applied	N x AQ110P; M x AQ101

N: 1 t o 6; M: 1 to 20.

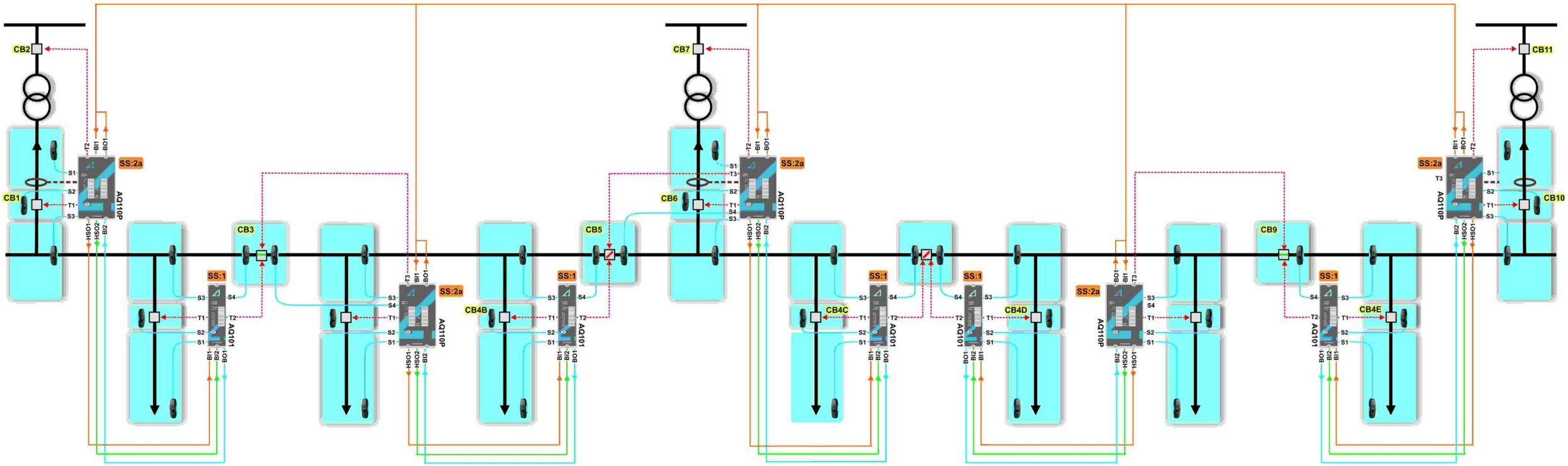

Figure 7-1 Multi Incomers with Multi Tie Breakers

7.1.2. I/O Description

AQ110P – SS2a (Incomer):

L>	I> (ext.)	I> (int.)	I/O Description	Trip Description
		IL, Io	✓ Current inputs Phase IL1, IL2, IL3 and E/F Io. ✓ Measuring current for incomer(s).	✓ Signal outputs: HSO1 (I>) to outgoing units AQ101-SS1 input BI1. BO1 (I>) to incomer units AQ110P-SS2a input BI1.
	BI1		✓ Binary input 1.	✓ Signal outputs: HSO1 (I>) to outgoing units AQ101-SS1 input BI1.
S1			✓ Sensor channel 1. ✓ Monitoring incoming cable compartment.	✓ Trip criteria: L> only. ✓ Trip outputs: T1 (incomer CB), T2 (upstream CB (HV side)), T4 (trip alarm).
S2		IL, Io	✓ Sensor channel 2. ✓ Monitoring incoming circuit breaker compartment.	✓ Trip criteria: I> + L>. ✓ Trip outputs: T1 (incomer CB), T2 (upstream CB (HV side)), T3 (tie breaker if in use), T4 (trip alarm). ✓ Signal outputs: HSO2 (MT) to outgoing units AQ101-SS1 input BI2.
	BI1			
S3		IL, Io	✓ Sensor channel 3. ✓ Monitoring busbar compartment.	✓ Trip criteria: I> + L>. ✓ Trip outputs: T1 (incomer CB), T3 (tie breaker if in use), T4 (trip alarm). ✓ Signal outputs: HSO2 (MT) to outgoing units AQ101-SS1 input BI2.
	BI1			
S4		IL, Io	✓ Sensor channel 4. ✓ Monitoring tie breaker (if in use).	✓ Trip criteria: I> + L>. ✓ Trip outputs: T1 (incomer CB), T3 (tie breaker if in use), T4 (trip alarm). ✓ Signal outputs: HSO2 (MT) to outgoing units AQ101-SS1 input BI2.
	BI1			
BI2		IL, Io	✓ Binary input 2.	✓ Trip criteria: I> + L> ✓ Trip outputs: T1 (incomer CB), T3 (tie breaker if in use), T4 (trip alarm). ✓ Signal outputs: HSO2 (MT) to outgoing unit AQ101-SS1 input BI2. ✓ Signal inputs: BI2 (L>) from outgoing units AQ101-SS1 output BO1.
	BI1			

Table 7-1: Trip and I/O Description - AQ110P SS2a

Inputs			Outputs						
L>	**I> (ext.)**	**I> (int.)**	**T1**	**T2**	**T3**	**T4**	**HSO1 (I>)**	**HSO2 (MT)**	**BO1**
		IL, Io					√		√
	BI1								
S1			√	√		√			
S2		IL, Io	√	√	√	√	√	√	√
	BI1								
S3		IL, Io	√		√	√	√	√	√
	BI1								
S4		IL, Io	√		√	√	√	√	√
	BI1								
BI2		IL, Io	√		√	√	√	√	√
	BI1								

Table 7-2: Trip and I/O logic - AQ110P SS2a

AQ110P – SS2A (OUTGOING):

L>	I> (ext.)	I/O Description	Trip Description
	BI1	✓ Binary input 1.	✓ Signal outputs: HSO1 (I>) to outgoing units AQ101-SS1 input BI1. BO1 (I>) to incomer units AQ110P-SS2a input BI1.
S1		✓ Sensor channel 1. ✓ Monitoring incoming cable compartment.	✓ Trip criteria: **I> + L>.** ✓ Trip outputs: T1 (incomer CB), T2 (upstream CB (HV side)), T4 (trip alarm).
S2	BI1	✓ Sensor channel 2. ✓ Monitoring incoming circuit breaker compartment.	✓ Trip criteria: I> + L>. ✓ Trip outputs: T1 (incomer CB), T2 (upstream CB (HV side)), T3 (tie breaker), T4 (trip alarm). ✓ Signal outputs: HSO2 (MT) to outgoing units AQ101-SS1 input BI2.
S3	BI1	✓ Sensor channel 3. ✓ Monitoring busbar compartment.	✓ Trip criteria: I> + L>. ✓ Trip outputs: T1 (incomer CB), T3 (tie breaker), T4 (trip alarm). ✓ Signal outputs: HSO2 (MT) to outgoing units AQ101-SS1 input BI2.
S4	BI1	✓ Sensor channel 4. ✓ Monitoring tie breaker.	✓ Trip criteria: I> + L>. ✓ Trip outputs: T1 (incomer CB), T3 (tie breaker), T4 (trip alarm). ✓ Signal outputs: HSO2 (MT) to outgoing units AQ101-SS1 input BI2.
BI2	BI1	✓ Binary input 2.	✓ Trip criteria: I> + L> ✓ Trip outputs: T1 (incomer CB), T3 (tie breaker), T4 (trip alarm). ✓ Signal outputs: HSO2 (MT) to outgoing unit AQ101-SS1 input BI2. ✓ Signal inputs: BI2 (L>) from outgoing units AQ101-SS1 output BO1.

Table 7-3: Trip and I/O Description - AQ110P SS2a

Inputs		Outputs						
L>	**I> (ext.)**	**T1**	**T2**	**T3**	**T4**	**HSO1 (I>)**	**HSO2 (MT)**	**BO1**
	BI1					√		√
S1	BI1	√	√		√	√		√
S2	BI1	√	√	√	√	√	√	√
S3	BI1	√		√	√	√	√	√
S4	BI1	√		√	√	√	√	√
BI2	BI1	√		√	√	√	√	√

Table 7-4: Trip and I/O logic - AQ110P SS2a

AQ101-SS1:

L>	I> (ext.)	I/O Description	Trip Description
	BI1	✓ Binary input 1.	✓ Signal inputs: BI1 (I>) from incomer unit AQ110P-SS2a output HSO1.
S1	BI1	✓ Sensor channel 1. ✓ Monitoring outgoing cable compartment.	✓ Trip criteria: I> + L>. ✓ Trip outputs: T1 (outgoing CB), T3 (not in use), T4 (trip alarm). ✓ Signal outputs: BO1 (L>) to incomer unit AQ110P-SS2a after CBFP setting time.
S2	BI1	✓ Sensor channel 2. ✓ Monitoring outgoing circuit breaker compartment.	✓ Trip criteria: I> + L>. ✓ Trip outputs: T2 (CBFP), T4 (CBFP). ✓ Signal outputs: BO1 (L>) to incomer unit AQ110P-SS2a input BI2. ✓ Signal inputs: BI2 (MT) from incomer unit AQ110P-SS2a output HSO2.
S3/S4	BI1	✓ Sensor channel 3/4. ✓ Monitoring busbar compartment.	✓ Trip criteria: I> + L>. ✓ Trip outputs: T2 (CBFP), T4 (CBFP). ✓ Signal outputs: BO1 (L>) to incomer unit AQ110P-SS2a input BI2. ✓ Signal inputs: BI2 (MT) from incomer unit AQ110P-SS2a output HSO2.
BI2		✓ Binary input 2.	✓ Trip criteria: I> + L> ✓ Trip outputs: T1 (outgoing CB), T2 (not in use), T3 (not in use), T4 (trip alarm). ✓ Signal inputs: BI2 (MT) from incomer unit AQ110P-SS2a output HSO2.

Table 7-5: Trip and I/O Description - AQ101 SS1

Inputs		Outputs				
L>	**I> (ext.)**	**T1**	**T2**	**T3**	**T4**	**BO1**
	BI1					
S1	BI1	√	√(CBFP)	√	√	√(CBFP)
S2	BI1		√(CBFP)		√(CBFP)	√
S3	BI1		√(CBFP)		√(CBFP)	√
S4	BI1		√(CBFP)		√(CBFP)	√
BI2		√(MT)	√(CBFP)	√(MT)	√(MT)	

Table 7-6: Trip and I/O Logic - AQ101-SS1

7.1.3. CONNECTIONS

AQ110P-SS2A (INCOMER):

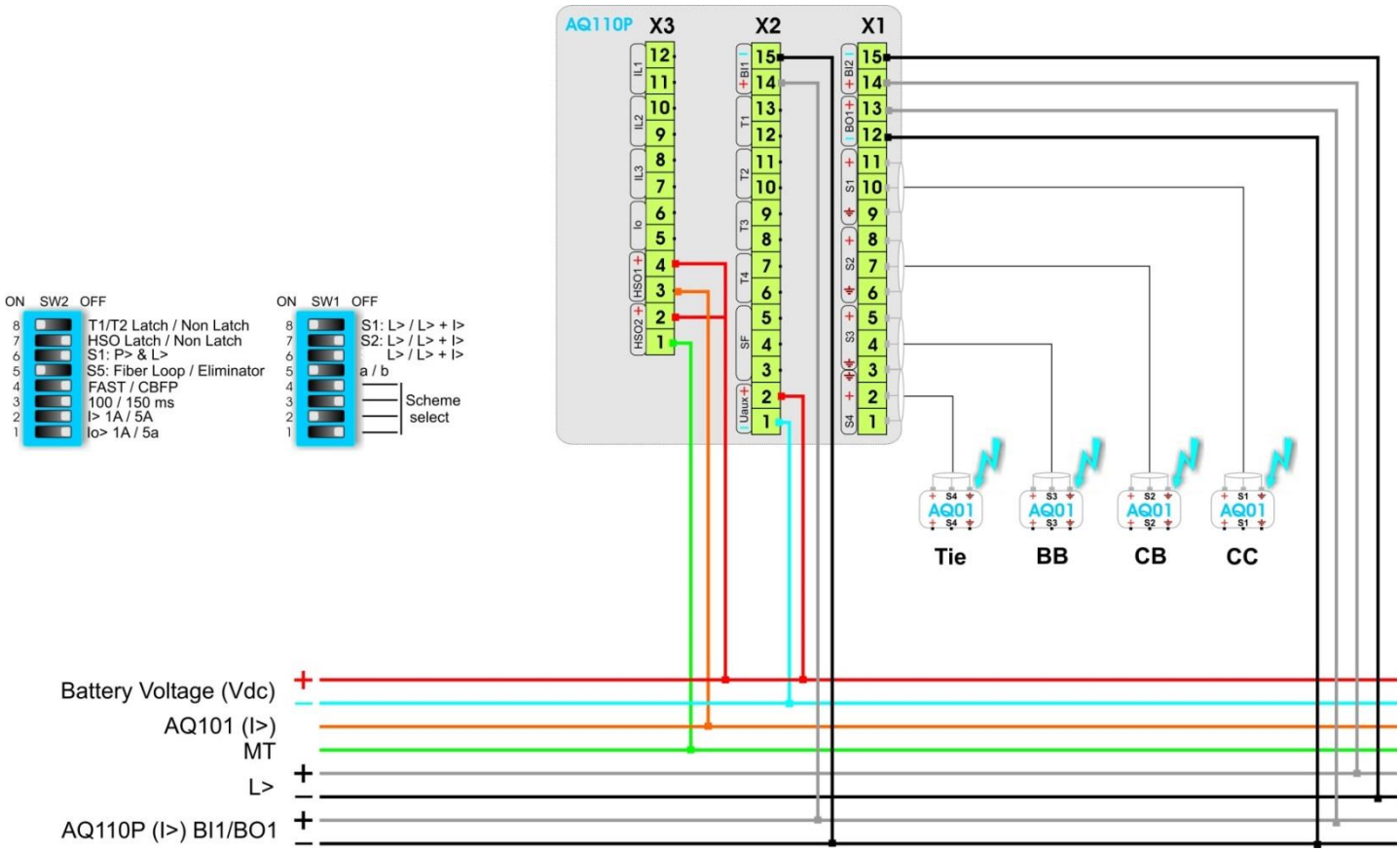

AQ110P-SS2A (OUTGOING):

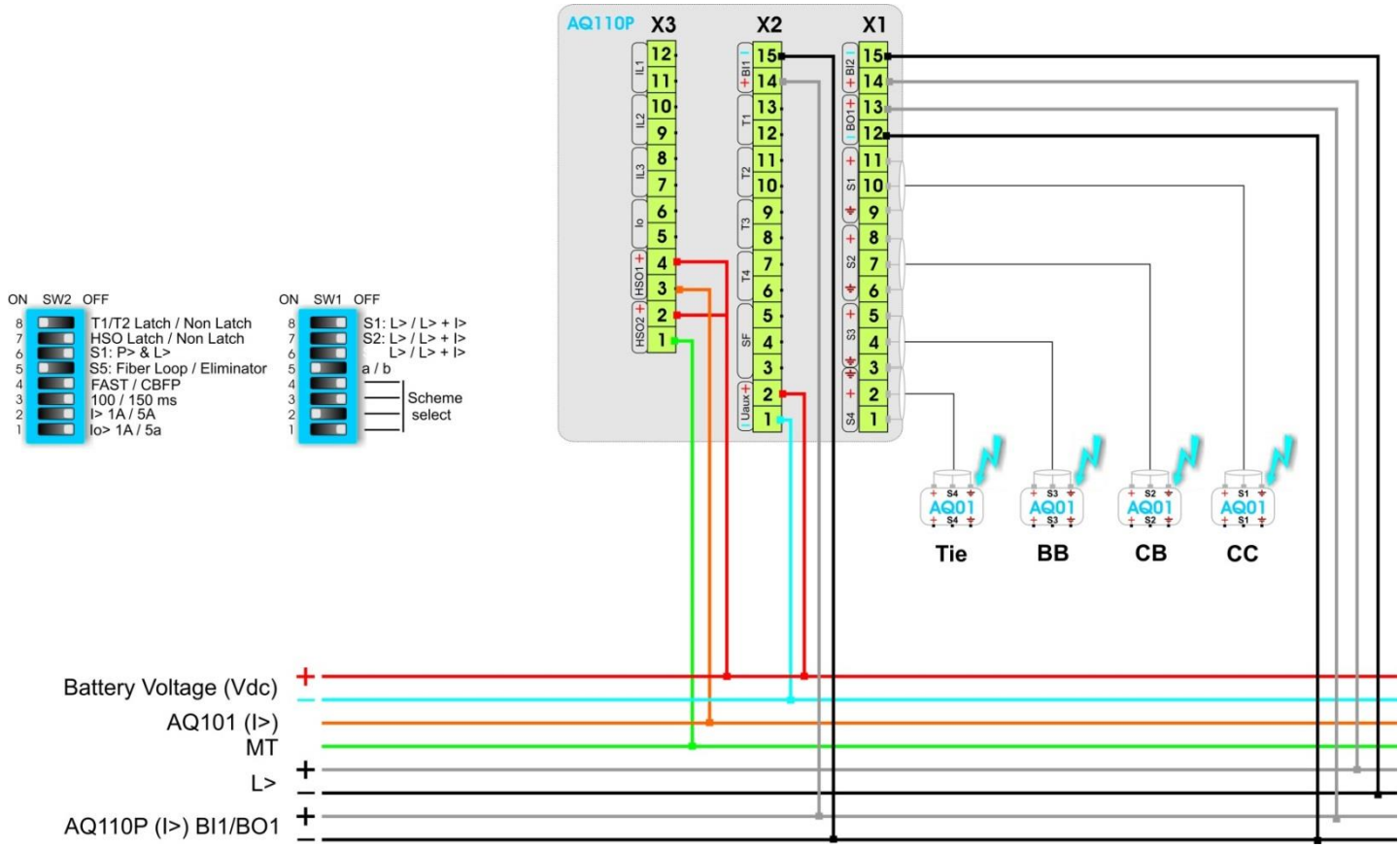

AQ101-SS1:

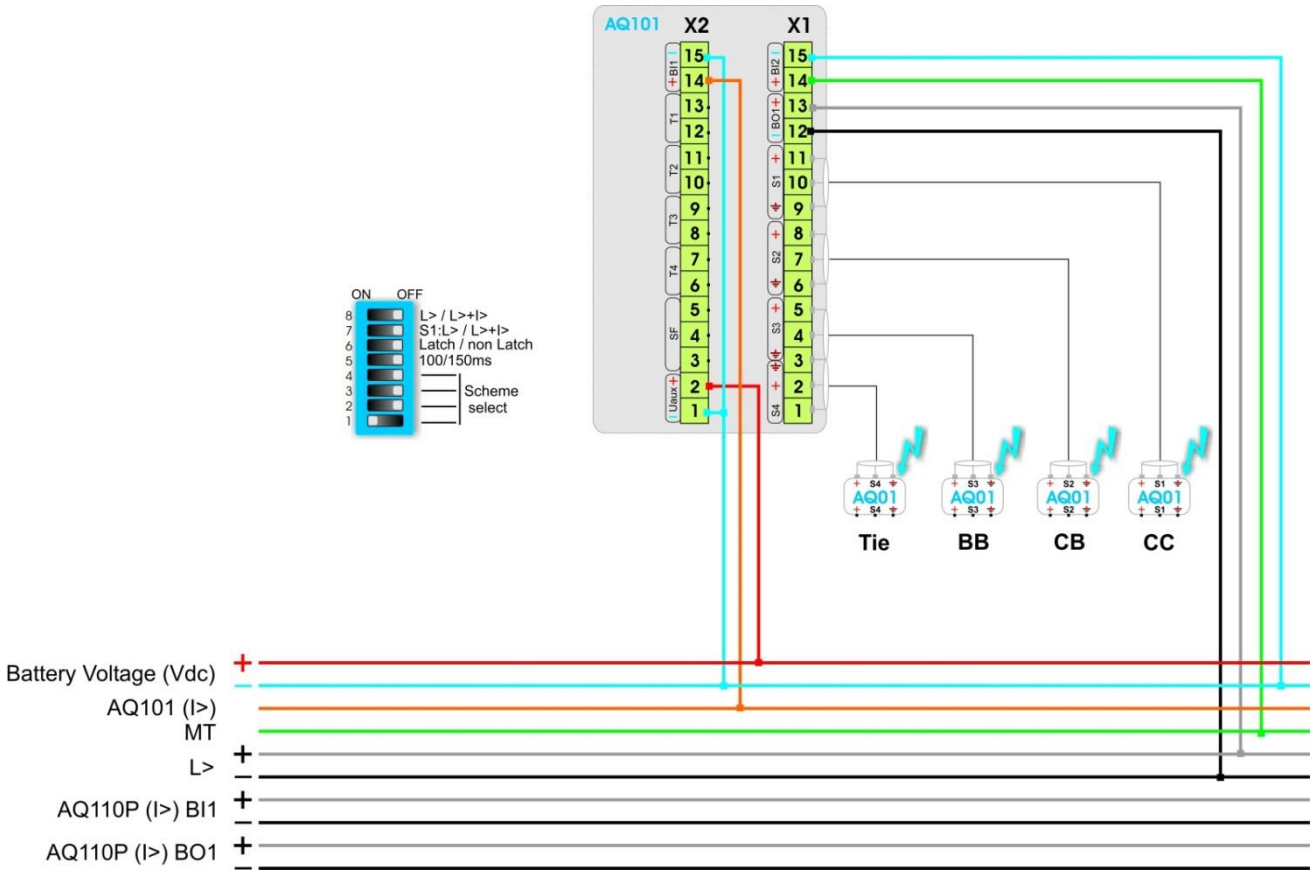
AQ101
X2
X1
ON
OFF
L> / L>+I>
S1:L> / L>+I>
Latch / non Latch
100/150ms
Scheme
select
Tie
BB
CB
CC
Battery Voltage (Vdc)
AQ101 (I>)
MT
L>
AQ110P (I>) BI1
AQ110P (I>) BO1

8. Double Busbar

8.1. Two Incomers With Bus Section & Bus Coupler (Double Busbar)

8.1.1. Scheme characteristics

Scheme Selection Number	AQ110P – SS3a; AQ101S-SS1, AQ101S-SS2, AQ101S-SS3, AQ101S-SS4;
Number of Incoming Feeders	2 x incoming feeders
Number of Outgoing Feeders	M x outgoing feeders
Number of the Circuit Breakers	2 x incomer CBs; M x outgoing CBs
Number of Bus Sections	1
Number of Bus Couplers	1
Selective for Breaker Position	YES
Selective Trip for Incoming Feeder CBs	YES
Selective Trip for Outgoing Feeder CBs	YES
Selective Trip for Bus Section	YES
Selective Trip for Bus Coupler	YES
Master Trip Function	NO
Units Applied	2 x AQ110P; (Inc. Main unit) M x AQ101S – SS1; (Out. unit) 1 x AQ101S – SS1; (Bus Coupler) 1 x AQ101S – SS2; (Inc. Sub-unit) 1 x AQ101S – SS3;(Inc. Sub-unit) 1 x AQ101S – SS4; (Bus Section)

M: 1 to 20.

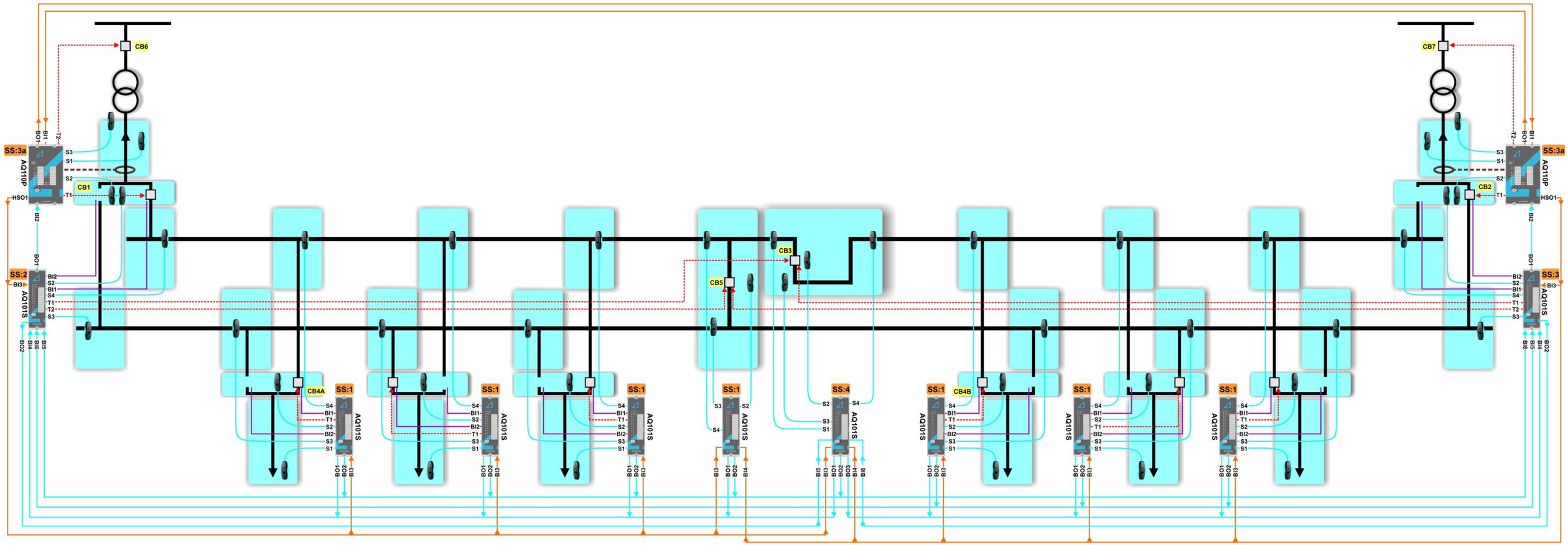

Figure 8-1 Two Incomers with Bus Section & Bus Coupler (Double Busbar)

8.1.2. Trip and I/O Description

The following trip and I/O description illustrates the busbar configuration of "Incomer 1 at Main Bus and Incomer 2 at Reserve Bus with Bus Section and Bus Coupler". For more busbar configurations for Double Busbar with Bus Section and Bus Coupler, please consult your Arcteq representative for a solution.

AQ110P – SS3a (Incomer (L)):

<table>
<tr><th>L></th><th>I> (ext.)</th><th>I> (int.)</th><th>I/O Description</th><th>Trip Description</th></tr>
<tr><td rowspan="2"></td><td></td><td>IL, Io</td><td>✓ Current inputs Phase IL1, IL2, IL3 and E/F Io.
✓ Measuring current for incomer(s).</td><td>✓ Signal outputs: HSO1 (I>) to outgoing units AQ101S-SS2 input BI3, AQ101S-SS1(L) input BI3, AQ101S-SS1(BC) input BI3 and AQ101S-SS1(SB) input BI3.
✓ Signal outputs: BO1 (I>) to outgoing units AQ110P-SS3a(R) input BI1.</td></tr>
<tr><td>BI1</td><td></td><td>✓ Binary input 1.</td><td>✓ Signal inputs: I> from incomer unit AQ110P-SS3a output BO1.</td></tr>
<tr><td rowspan="2">S1</td><td></td><td>IL, Io</td><td rowspan="2">✓ Sensor channel 1.
✓ Monitoring incoming cable compartment.</td><td rowspan="6">✓ Trip criteria: I> + L>.
✓ Trip outputs: T1 (CB1), T2 (CB6), T4 (trip alarm).
✓ Signal inputs: (L>) from incomer sub unit AQ101S-SS2 BO1.</td></tr>
<tr><td>BI1</td><td></td></tr>
<tr><td rowspan="2">S2</td><td></td><td>IL, Io</td><td rowspan="2">✓ Sensor channel 2.
✓ Monitoring incoming circuit breaker compartment.</td></tr>
<tr><td>BI1</td><td></td></tr>
<tr><td rowspan="2">S3</td><td></td><td>IL, Io</td><td rowspan="2">✓ Sensor channel 3.
✓ Monitoring voltage transformer.</td></tr>
<tr><td>BI1</td><td></td></tr>
<tr><td rowspan="2">BI2</td><td></td><td>IL, Io</td><td rowspan="2">✓ Binary input 2.</td><td>✓ Trip criteria: I> + L>.
✓ Trip outputs: T1 (CB1), T2 (CBFP to CB6), T4 (trip alarm).
✓ Signal inputs: (L>) from incomer sub unit AQ101S-SS2 BO1.</td></tr>
<tr><td>BI1</td><td></td><td>✓ Trip criteria: I> + L>.
✓ Trip outputs: T1 (CB1), T3 (CBF trip alarm), T4 (trip alarm).
✓ Signal inputs: (L>) from incomer sub unit AQ101S-SS2 BO1.</td></tr>
</table>

Table 8-1: Trip and I/O Description (Unit) - AQ110P SS3a

Inputs			Outputs						
L>	**I> (ext.)**	**I> (int.)**	**T1**	**T2**	**T3**	**T4**	**HSO1 (I>)**	**HSO2 (MT)**	**BO1**
		IL, Io					√		√
	BI1								
S1		IL, Io	√	√		√	√	√(CBFP)*	√
	BI1								
S2		IL, Io	√	√		√	√	√*	√
	BI1								
S3		IL, Io	√	√		√	√	√(CBFP)*	√
	BI1								
BI2		IL, Io	√	√(CBFP)		√	√	√*	√
	BI1		√		√(CBFP)	√	√	√*	√

Table 8-2: Trip and I/O logic (Unit) - AQ110P SS3a

Note: * signals are not in use for this application.

L>	I>	CB1	CB2	CB3	CB4A	CB4B	CB5	CB6	CB7
S1	√	√						√	
S2	√	√						√	
S3	√	√						√	

Table 8-3: Trip logic (Application) - AQ110P SS3a

AQ101S – SS2 (INCOMER SUB-UNIT (L)):

BI1 of AQ101S-SS2(L) indicates that the incomer CB is connected to main busbar. BI2 of AQ101S-SS2(L) indicates that the incomer CB is connected to reserve busbar.

L>	I> (ext.)	I/O Description	Trip Description
	BI3	✓ Binary Input 3.	✓ Signal inputs: I> from incomer unit AQ110P-SS3a(L) output HSO1.
S2	BI3	✓ Sensor Channel 2. ✓ Monitoring incomer CB.	✓ Trip criteria: I> + L>. ✓ Trip outputs: T1 (CB3), T2 (CB5), T3 (trip alarm). ✓ Signal outputs: BO1 (L>) to AQ110P-SS3a(L) input BI2. BO2 (L>) to AQ101S-SS4 input BI5.
S3	BI3	✓ Sensor Channel 3. ✓ Monitoring reserve busbar at left coupler side.	✓ Trip criteria: I> + L>. ✓ Trip outputs: T2 (CB5), T3 (trip alarm). ✓ Signal outputs: BO2(L>) to AQ101S-SS4 input BI5.
S4	BI3	✓ Sensor Channel 4. ✓ Monitoring main busbar at left section side.	✓ Trip criteria: I> + L>. ✓ Trip outputs: T1 (CB3), T2 (CB5), T3 (trip alarm). ✓ Signal outputs: BO1 (L>) to AQ110P-SS3a(L) input BI2. BO3(L>) not in use.
BI4	BI3	✓ Binary Input 4. ✓ Arc fault at main busbar at left section side.	✓ Trip criteria: I> + L>. ✓ Trip outputs: T1 (CB3), T2 (CB5), T3 (trip alarm). ✓ Signal outputs: BO1 (L>) to AQ110P-SS3a(L) input BI2.
BI5	BI3	✓ Binary Input 5. ✓ Arc fault at reserve busbar at left coupler side.	✓ Trip criteria: I> + L>. ✓ Trip outputs: T2 (CB5), T3 (trip alarm).
BI6	BI3	✓ Binary Input 6. ✓ Arc fault at reserve busbar at right coupler side.	✓ Trip criteria: I> + L>. ✓ Trip outputs: T2 (CB5), T3 (trip alarm).

Table 8-4: Trip and I/O Description (Unit) – AQ101S-SS2(L)

Inputs		Outputs					
L>	I> (ext.)	T1	T2	T3	BO1	BO2	BO3
	BI3						
S2	BI3	√	√	√	√	√	
S3	BI3		√	√		√	
S4	BI3	√	√	√	√		√*
BI4	BI3	√	√	√	√		
BI5	BI3		√	√			
BI6	BI3		√	√			

Table 8-5: Trip and I/O logic (Unit) - AQ101S-SS2(L)

Note: * signals are not in use for this application.

L>	I>	CB1	CB2	CB3	CB4A	CB4B	CB5	CB6	CB7
S2	√	√	√	√			√		
S3	√		√						
S4	√	√		√			√		

Table 8-6: Trip logic (Application) - AQ101S-SS2(L)

AQ101S – SS1 (OUTGOING UNIT (L)):

BI1 of AQ101S-SS1(L) indicates that the incomer CB is connected to main busbar. BI2 of AQ101S-SS1(L) indicates that the incomer CB is connected to reserve busbar.

L>	I> (ext.)	I/O Description	Trip Description
	BI3	✓ Binary Input 3.	✓ Signal inputs: I> from incomer unit AQ110P-SS3a(L) output HSO1.
S1	BI3	✓ Sensor Channel 1. ✓ Monitoring outgoing cable compartment.	✓ Trip criteria: I> + L>. ✓ Trip outputs: T1 (CB4A), T3 (trip alarm).
S2	BI3	✓ Sensor Channel 2. ✓ Monitoring incomer CB.	✓ Trip criteria: I> + L>. ✓ Trip outputs: T2 (not in use), T3 (trip alarm). ✓ Signal outputs: BO1 (L>) to AQ101S-SS2 input BI4; BO2 (L>) to AQ101S-SS2 input BI5, to AQ101S-SS3 input BI6; BO3 (L>) not in use.
S3	BI3	✓ Sensor Channel 3. ✓ Monitoring reserve busbar at left coupler side.	✓ Trip criteria: I> + L>. ✓ Trip outputs: T2 (not in use), T3 (trip alarm). ✓ Signal outputs: BO2 (L>) to AQ101S-SS2 input BI5, to AQ101S-SS3 input BI6.
S4	BI3	✓ Sensor Channel 4. ✓ Monitoring main busbar at left section side.	✓ Trip criteria: I> + L>. ✓ Trip outputs: T2 (not in use), T3 (trip alarm). ✓ Signal outputs: BO1 (L>) to AQ101S-SS2 input BI4; BO3 (L>) not in use.

Table 8-7: Trip and I/O Description (Unit) – AQ101S-SS1(L)

Inputs		Outputs					
L>	I> (ext.)	T1	T2	T3	BO1	BO2	BO3
	BI3						
S1	BI3	√	√*	√			
S2	BI3		√*	√	√	√	√
S3	BI3		√*	√		√	
S4	BI3		√*	√	√		√

Table 8-8: Trip and I/O logic (Unit) - AQ101S-SS1(L)

Note: * Trip contact is not in use.

L>	I>	CB1	CB2	CB3	CB4A	CB4B	CB5	CB6	CB7
S1	√				√				
S2	√	√	√	√			√		
S3	√		√				√		
S4	√	√		√			√		

Table 8-9: Trip logic (Application) - AQ101S-SS1(L)

AQ101S – SS1 (Bus Coupler):

L>	I> (ext.)	I/O Description	Trip Description
	BI3	✓ Binary Input 3.	✓ Signal inputs: I> from incomer unit AQ110P-SS3a(L) output HSO1.
S2	BI3	✓ Sensor Channel 2. ✓ Monitoring bus coupler breaker compartment.	✓ Trip criteria: I> + L>. ✓ Trip outputs: T2 (not in use), T3 (trip alarm). ✓ Signal outputs: BO1 (L>) to AQ101S-SS2 input BI4; BO2 (L>) to AQ101S-SS2 input BI5, to AQ101S-SS3 input BI6; BO3 (L>) not in use.
S3	BI3	✓ Sensor Channel 3. ✓ Monitoring reserve busbar at bus coupler compartment.	✓ Trip criteria: I> + L>. ✓ Trip outputs: T2 (not in use), T3 (trip alarm). ✓ Signal outputs: BO2 (L>) to AQ101S-SS2 input BI5, to AQ101S-SS3 input BI6.
S4	BI3	✓ Sensor Channel 4. ✓ Monitoring main busbar at bus coupler compartment.	✓ Trip criteria: I> + L>. ✓ Trip outputs: T2 (not in use), T3 (trip alarm). ✓ Signal outputs: BO1 (L>) to AQ101S-SS2 input BI4; BO3 (L>) not in use.

Table 8-10: Trip and I/O Description (Unit) – AQ101S-SS1(BC)

Inputs		Outputs					
L>	I> (ext.)	T1	T2	T3	BO1	BO2	BO3
	BI3						
S2	BI3		√*	√	√	√	√
S3	BI3		√*	√		√	
S4	BI3		√*	√	√		√

Table 8-11: Trip and I/O logic (Unit) - AQ101S-SS1(BC)

Note: * Trip contact is not in use.

L>	I>	CB1	CB2	CB3	CB4A	CB4B	CB5	CB6	CB7
S2	√	√	√	√			√		
S3	√		√				√		
S4	√	√		√			√		

Table 8-12: Trip logic (Application) - AQ101S-SS1(BC)

AQ101S – SS4 (BUS SECTION):

L>	I> (ext.)	I/O Description	Trip Description
	BI3 /BI4	✓ Binary Input 3/4.	✓ Signal inputs: BI3(I>) from incomer unit AQ110P-SS3a(L) output HSO1. BI4(I>) from incomer unit AQ110P-SS3a(R) output HSO1.
S1	BI3 /BI4	✓ Sensor Channel 1. ✓ Monitoring main busbar at bus section left side.	✓ Trip criteria: I> + L>. ✓ Trip outputs: T1 (not in use), T3(not in use). ✓ Signal outputs: BO1(L>) to AQ101S-SS2 input BI4.
S2	BI3 /BI4	✓ Sensor Channel 2. ✓ Monitoring bus coupler breaker compartment.	✓ Trip criteria: I> + L>. ✓ Trip outputs: T1 (not in use), T2 (not in use), T3 (not in use). ✓ Signal outputs: BO1(L>) to AQ101S-SS2 input BI4; BO3(L>) to AQ101-SS3 input BI4.
S3	BI3 /BI4	✓ Sensor Channel 3. ✓ Monitoring bus riser.	✓ Trip criteria: I> + L>. ✓ Trip outputs: T2 (not in use), T3 (not in use). ✓ Signal outputs: BO3(L>) to AQ101-SS3 input BI4.
S4	BI3 /BI4	✓ Sensor Channel 4. ✓ Monitoring main busbar at bus section right side.	✓ Trip criteria: I> + L>. ✓ Trip outputs: T2 (not in use), T3 (not in use). ✓ Signal outputs: BO3(L>) to AQ101-SS3 input BI4.

Table 8-13: Trip and I/O Description (Unit) – AQ101S-SS4(BS)

Inputs		Outputs					
L>	I> (ext.)	T1	T2	T3	BO1	BO2	BO3
	BI3/4						
S1	BI3/4	√*		√*	√		
S2	BI3/4	√*	√*	√*	√		√
S3	BI3/4		√*	√*			√
S4	BI3/4		√*	√*			√

Table 8-14: Trip and I/O logic (Unit) - AQ101S-SS4(BS)

Note: * Trip contact is not in use.

L>	I>	CB1	CB2	CB3	CB4A	CB4B	CB5	CB6	CB7
S1	√	√		√			√		
S2	√	√		√			√		
S3	√			√					
S4	√			√					

Table 8-15: Trip logic (Application) - AQ101S-SS4(BS)

AQ101S – SS1 (OUTGOING UNIT (R)):

BI1 of AQ101S-SS1(R) indicates that the incomer CB is connected to main busbar. BI2 of AQ101S-SS1(R) indicates that the incomer CB is connected to reserve busbar.

L>	I> (ext.)	I/O Description	Trip Description
	BI3	✓ Binary Input 3.	✓ Signal inputs: I> from incomer unit AQ110P-SS3a(L) output HSO1.
S1	BI3	✓ Sensor Channel 1. ✓ Monitoring outgoing cable compartment.	✓ Trip criteria: I> + L>. ✓ Trip outputs: T1 (CB4B), T3 (trip alarm).
S2	BI3	✓ Sensor Channel 2. ✓ Monitoring incomer CB.	✓ Trip criteria: I> + L>. ✓ Trip outputs: T2 (not in use), T3 (trip alarm). ✓ Signal outputs: BO1 (L>) to AQ101S-SS3 input BI4; BO2 (L>) to AQ101S-SS3 input BI5, to AQ101S-SS2 input BI6; BO3 (L>) not in use.
S3	BI3	✓ Sensor Channel 3. ✓ Monitoring reserve busbar at left coupler side.	✓ Trip criteria: I> + L>. ✓ Trip outputs: T2 (not in use), T3 (trip alarm). ✓ Signal outputs: BO2 (L>) to AQ101S-SS3 input BI5, to AQ101S-SS2 input BI6.
S4	BI3	✓ Sensor Channel 4. ✓ Monitoring main busbar at left section side.	✓ Trip criteria: I> + L>. ✓ Trip outputs: T2 (not in use), T3 (trip alarm). ✓ Signal outputs: BO1 (L>) to AQ101S-SS3 input BI4; BO3 (L>) not in use.

Table 8-16: Trip and I/O Description (Unit) – AQ101S-SS1(R)

Inputs		Outputs					
L>	I> (ext.)	T1	T2	T3	BO1	BO2	BO3
	BI3						
S1	BI3	√	√*	√			
S2	BI3		√*	√	√	√	√
S3	BI3		√*	√		√	
S4	BI3		√*	√	√		√

Table 8-17: Trip and I/O Description (Unit) – AQ101S-SS1(R)

Note: * Trip contact is not in use.

L>	I>	CB1	CB2	CB3	CB4A	CB4B	CB5	CB6	CB7
S1	√					√			
S2	√		√	√			√		
S3	√		√				√		
S4	√			√					

Table 8-18: Trip logic (Application) - AQ101S-SS1(R)

AQ101S – SS3 (INCOMER SUB-UNIT (R)):

BI1 of AQ101S-SS3 indicates that the incomer CB is connected to main busbar. BI2 of AQ101S-SS3 indicates that the incomer CB is connected to reserve busbar.

L>	I> (ext.)	I/O Description	Trip Description
	BI3	✓ Binary Input 3.	✓ Signal inputs: I> from incomer unit AQ110P-SS3a(R) output HSO1.
S2	BI3	✓ Sensor Channel 2. ✓ Monitoring incomer CB.	✓ Trip criteria: I> + L>. ✓ Trip outputs: T1 (CB3), T2 (CB5), T3 (trip alarm). ✓ Signal outputs: BO2 (L>) to AQ101S-SS4 input BI6.
S3	BI3	✓ Sensor Channel 3. ✓ Monitoring reserve busbar at left coupler side.	✓ Trip criteria: I> + L>. ✓ Trip outputs: T2 (CB5), T3 (trip alarm). ✓ Signal outputs: BO1 (L>) to AQ110P-SS3a(R) input BI2. BO2 (L>) to AQ101S-SS4 input BI6.
S4	BI3	✓ Sensor Channel 4. ✓ Monitoring main busbar at left section side.	✓ Trip criteria: I> + L>. ✓ Trip outputs: T1 (CB3), T3 (trip alarm). ✓ Signal outputs: BO3(L>) not in use.
BI4	BI3	✓ Binary Input 4. ✓ Arc fault at main busbar at left section side.	✓ Trip criteria: I> + L>. ✓ Trip outputs: T1 (CB3), T3 (trip alarm).
BI5	BI3	✓ Binary Input 5. ✓ Arc fault at reserve busbar at left coupler side.	✓ Trip criteria: I> + L>. ✓ Trip outputs: T2 (CB5), T3 (trip alarm). ✓ Signal outputs: BO1 (L>) to AQ110P-SS3a(R) input BI2.
BI6	BI3	✓ Binary Input 6. ✓ Arc fault at reserve busbar at right coupler side.	✓ Trip criteria: I> + L>. ✓ Trip outputs: T2 (CB5), T3 (trip alarm). ✓ Signal outputs: BO1 (L>) to AQ110P-SS3a(R) input BI2.

Table 8-19: Trip and I/O Description (Unit) – AQ101S-SS3

Inputs		Outputs					
L>	I> (ext.)	T1	T2	T3	BO1	BO2	BO3
	BI3						
S2	BI3	√	√	√		√	
S3	BI3		√	√	√	√	
S4	BI3	√		√			√*
BI4	BI3	√		√			
BI5	BI3		√	√	√		
BI6	BI3		√	√	√		

Table 8-20: Trip and I/O logic (Unit) - AQ101S-SS3

Note: * signals are not in use for this application.

L>	I>	CB1	CB2	CB3	CB4A	CB4B	CB5	CB6	CB7
S2	√	√	√	√			√		
S3	√		√				√		
S4	√			√					

Table 8-21: Trip logic (Application) - AQ101S-SS3

AQ110P – SS3A (INCOMER (R)):

L>	I> (ext.)	I> (int.)	I/O Description	Trip Description
		IL, Io	✓ Current inputs Phase IL1, IL2, IL3 and E/F Io. ✓ Measuring current for incomer(s).	✓ Signal outputs: HSO1 (I>) to outgoing units AQ101S-SS3 input BI3, AQ101S-SS1(R) input BI3, AQ101S-SS1(BC) input BI3 and AQ101S-SS1(SB) input BI4. ✓ Signal outputs: BO1 (I>) to outgoing units AQ110P-SS3a(L) input BI1.
	BI1		✓ Binary input 1.	✓ Signal inputs: I> from incomer unit AQ110P-SS3a(L) output BO1.
S1		IL, Io	✓ Sensor channel 1. ✓ Monitoring incoming cable compartment.	✓ Trip criteria: I> + L>. ✓ Trip outputs: T1 (CB2), T2 (CB7), T4 (trip alarm). ✓ Signal inputs: (L>) from incomer sub unit AQ101S-SS3 BO1.
	BI1			
S2		IL, Io	✓ Sensor channel 2. ✓ Monitoring incoming circuit breaker compartment.	
	BI1			
S3		IL, Io	✓ Sensor channel 3. ✓ Monitoring voltage transformer.	
	BI1			
BI2		IL, Io	✓ Binary input 2.	✓ Trip criteria: I> + L>. ✓ Trip outputs: T1 (CB2), T2 (CBFP to CB7), T4 (trip alarm). ✓ Signal inputs: (L>) from incomer sub unit AQ101S-SS3 BO1.
	BI1			✓ Trip criteria: I> + L>. ✓ Trip outputs: T1 (CB2), T3 (CBF trip alarm), T4 (trip alarm). ✓ Signal inputs: (L>) from incomer sub unit AQ101S-SS3 BO1.

Table 8-22: Trip and I/O Description (Unit) - AQ110P SS3a(R)

Inputs			Outputs						
L>	**I> (ext.)**	**I> (int.)**	**T1**	**T2**	**T3**	**T4**	**HSO1 (I>)**	**HSO2 (MT)**	**BO1**
		IL, Io					√		√
	BI1								
S1		IL, Io	√	√		√	√	√(CBFP)*	√
	BI1								
S2		IL, Io	√	√		√	√	√*	√
	BI1								
S3		IL, Io	√	√		√	√	√(CBFP)*	√
	BI1								
BI2		IL, Io	√	√(CBFP)		√	√	√*	√
	BI1		√		√(CBFP)	√	√	√*	√

Table 8-23: Trip and I/O logic (Unit) - AQ110P SS3a(R)

Note: * signals are not in use for this application.

L>	I>	CB1	CB2	CB3	CB4A	CB4B	CB5	CB6	CB7
S1	√		√						√
S2	√		√						√
S3	√		√						√

Table 8-24: Trip logic (Application) - AQ110P SS3a(R)

8.1.3. CONNECTIONS

AQ110P – SS3A (INCOMER (L)):

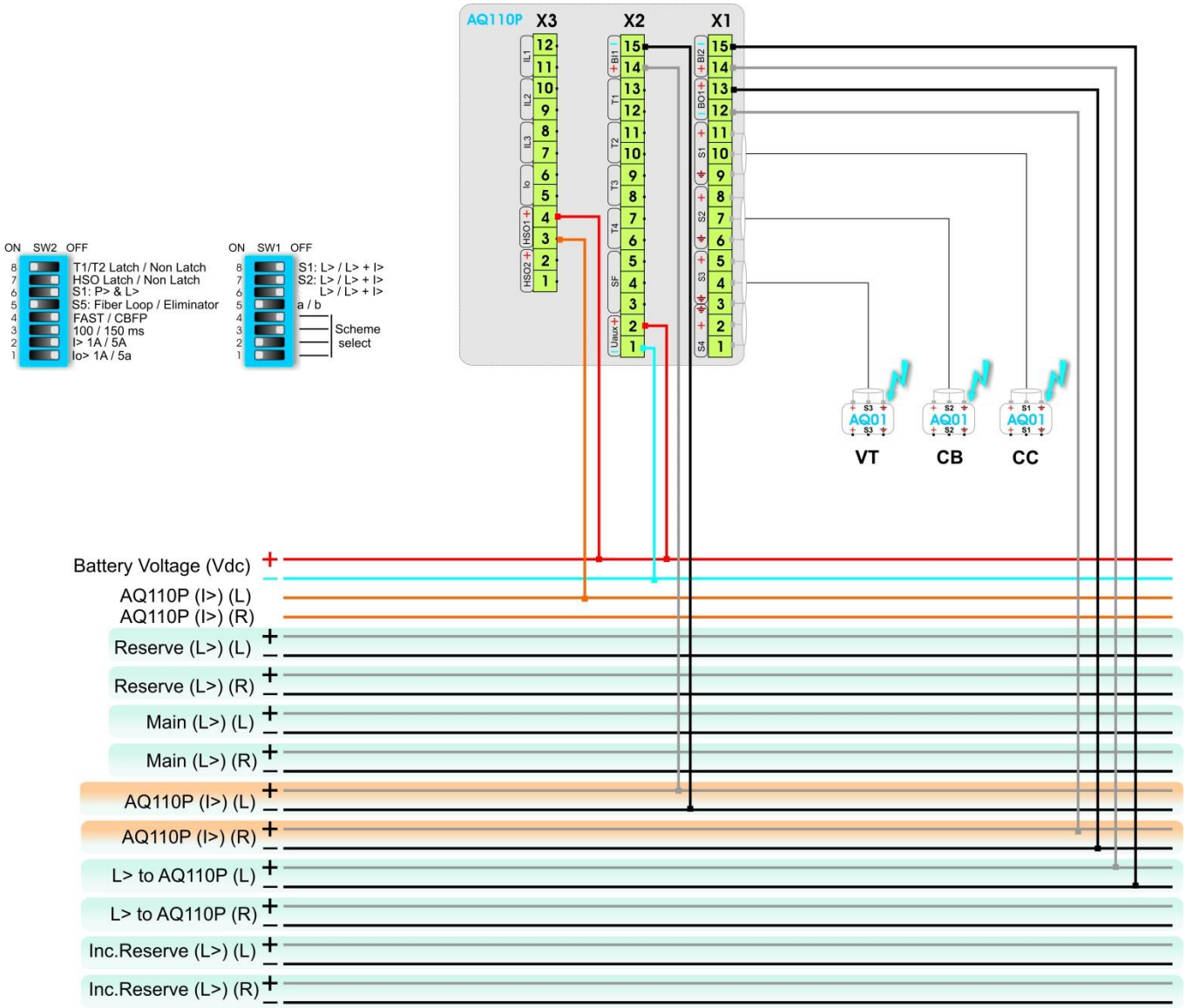

AQ101S – SS2 (INCOMER SUB-UNIT (L)):

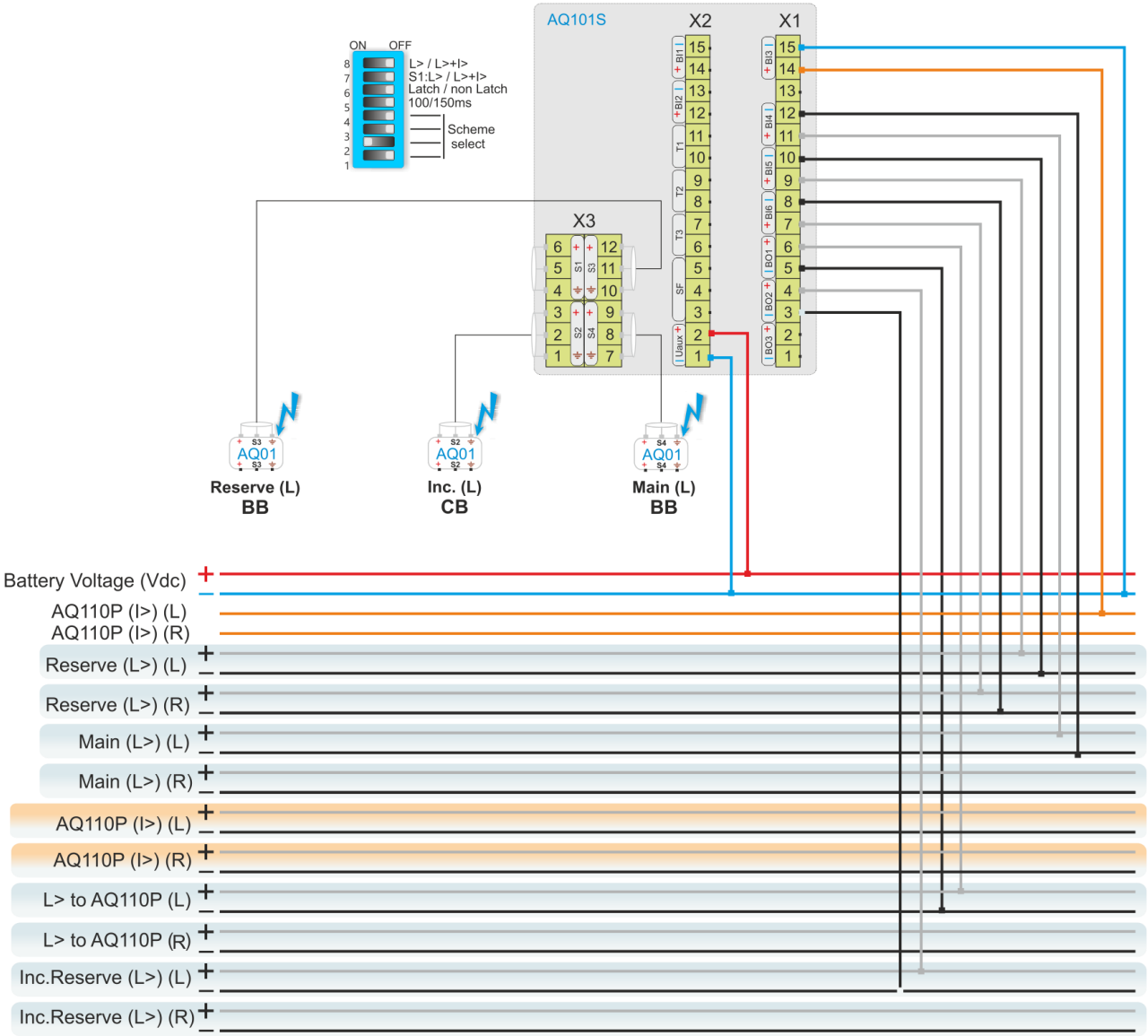

AQ101S – SS1 (OUTGOING UNIT (L)):

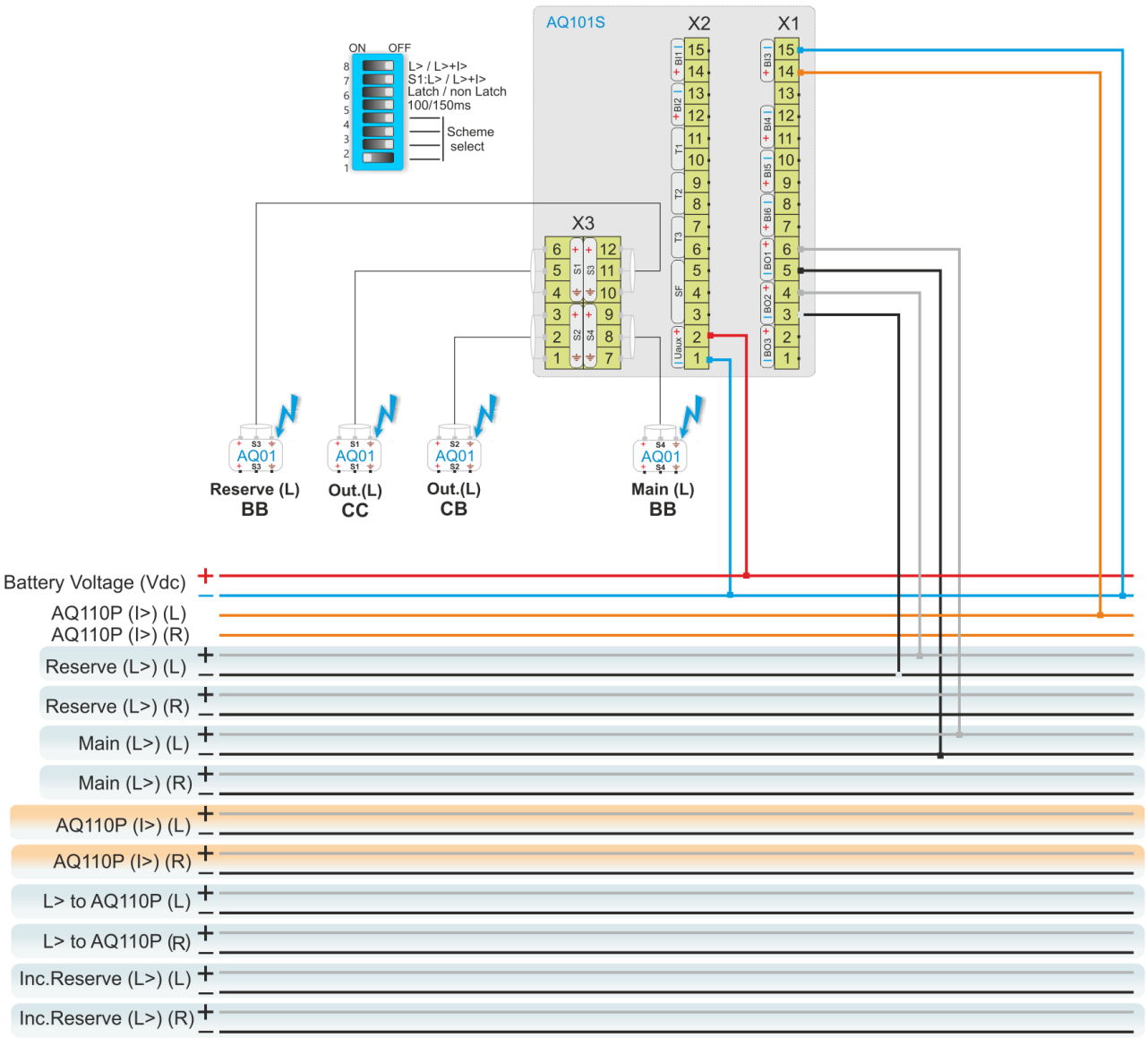

AQ101S – SS1 (Bus Coupler):

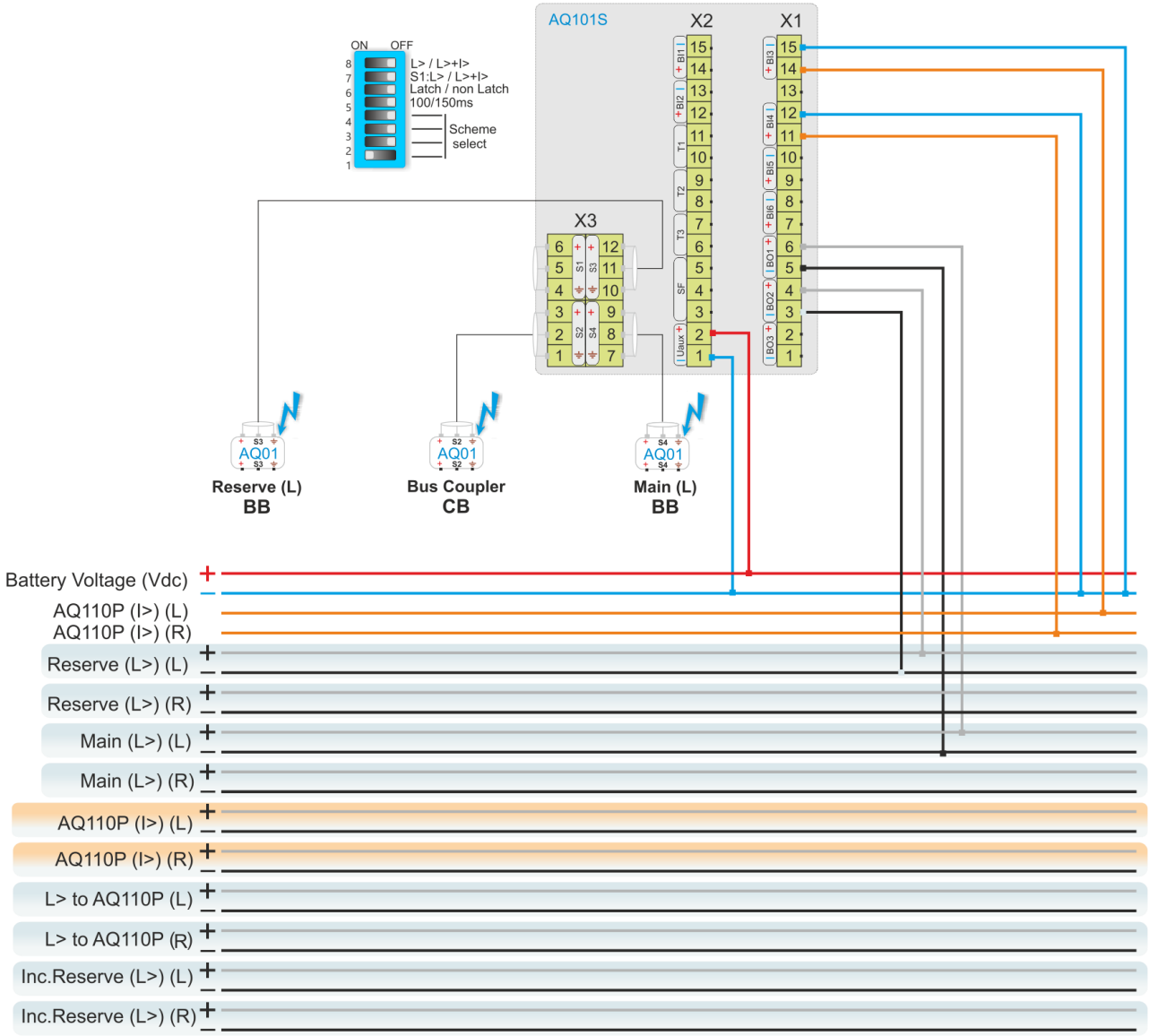

AQ101S – SS4 (Bus Section):

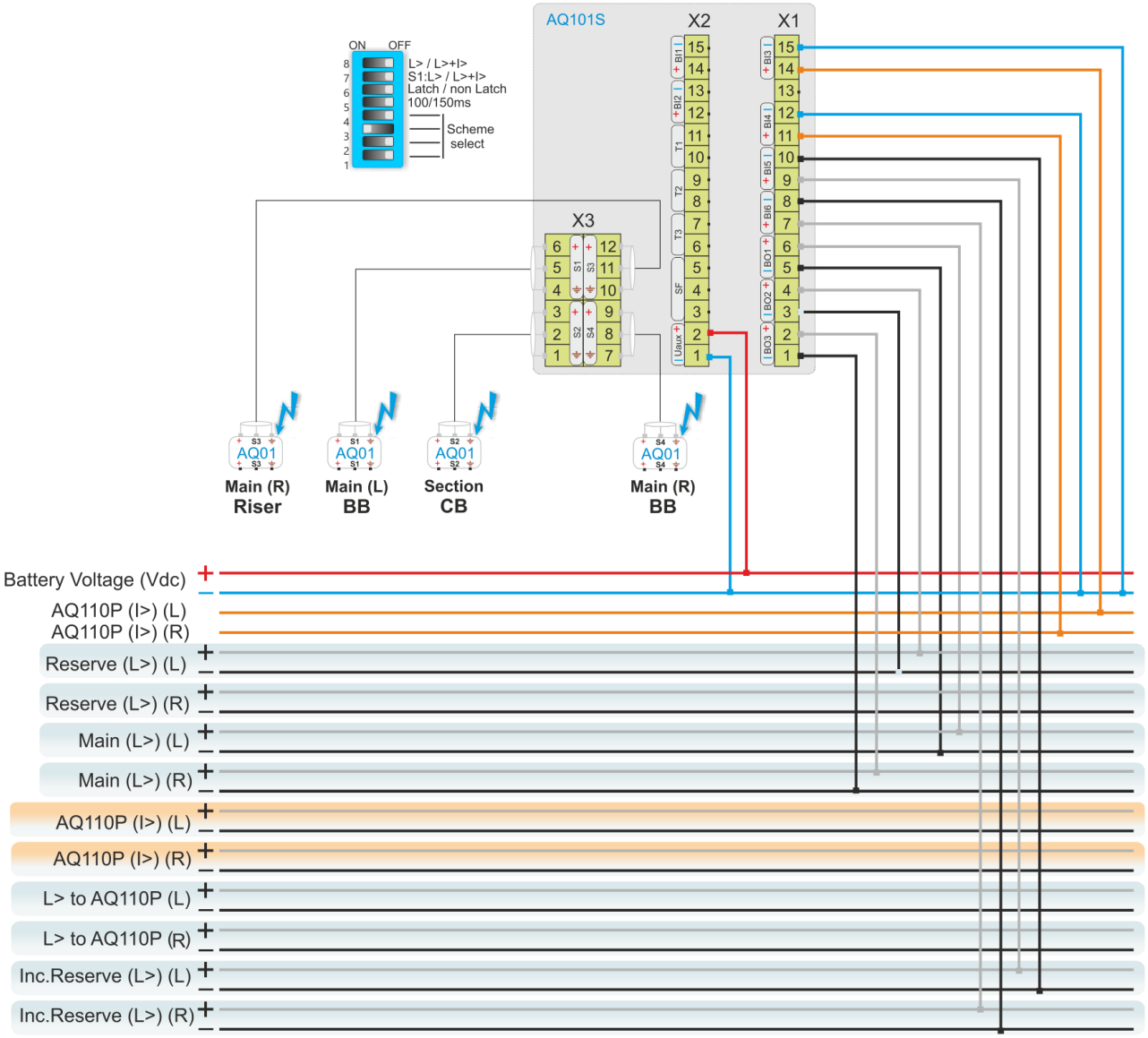

AQ101S – SS1 (Outgoing unit (R)):

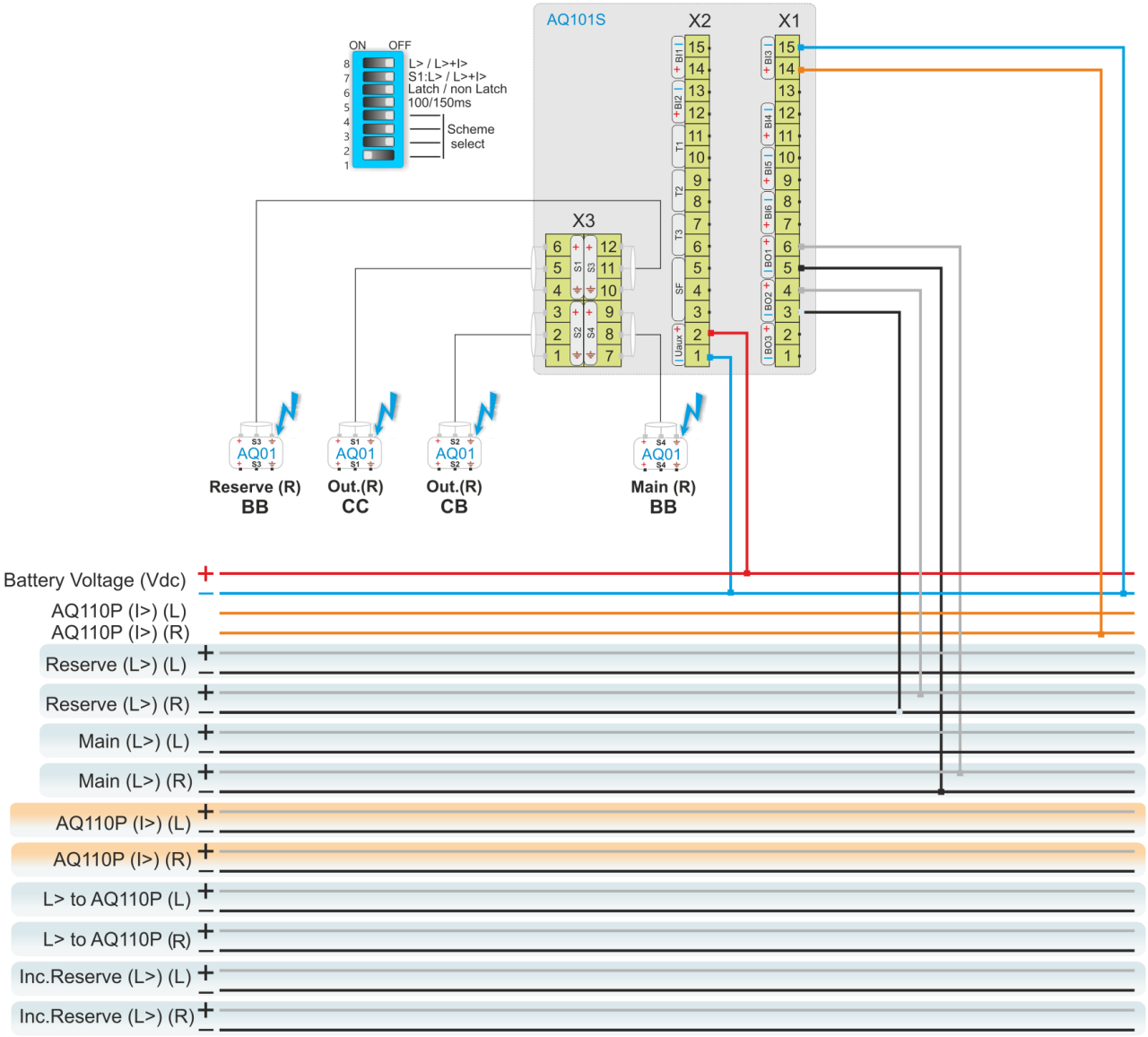

AQ101S – SS3 (INCOMER SUB-UNIT (R)):

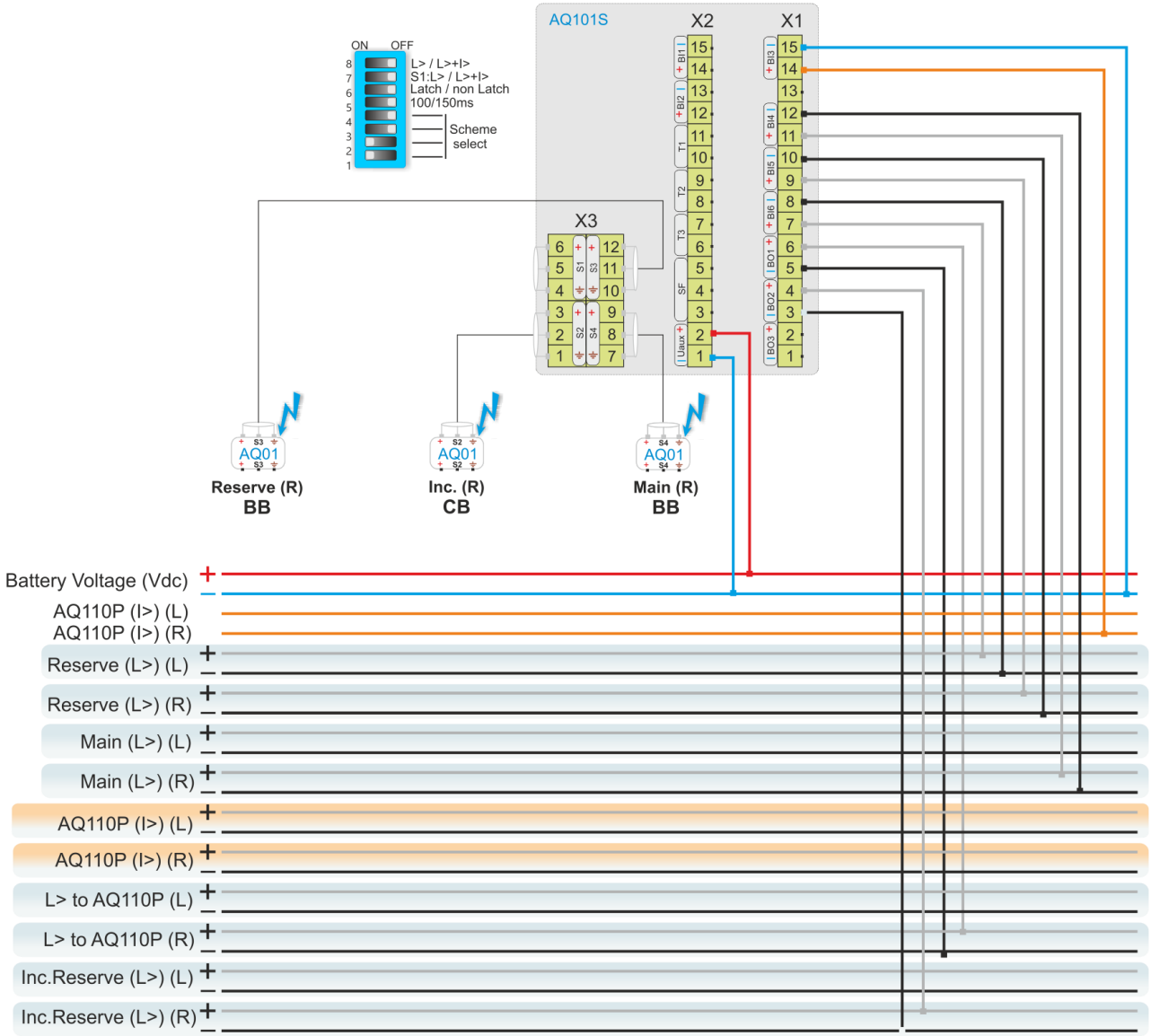

AQ110P – SS3A (INCOMER (R)):

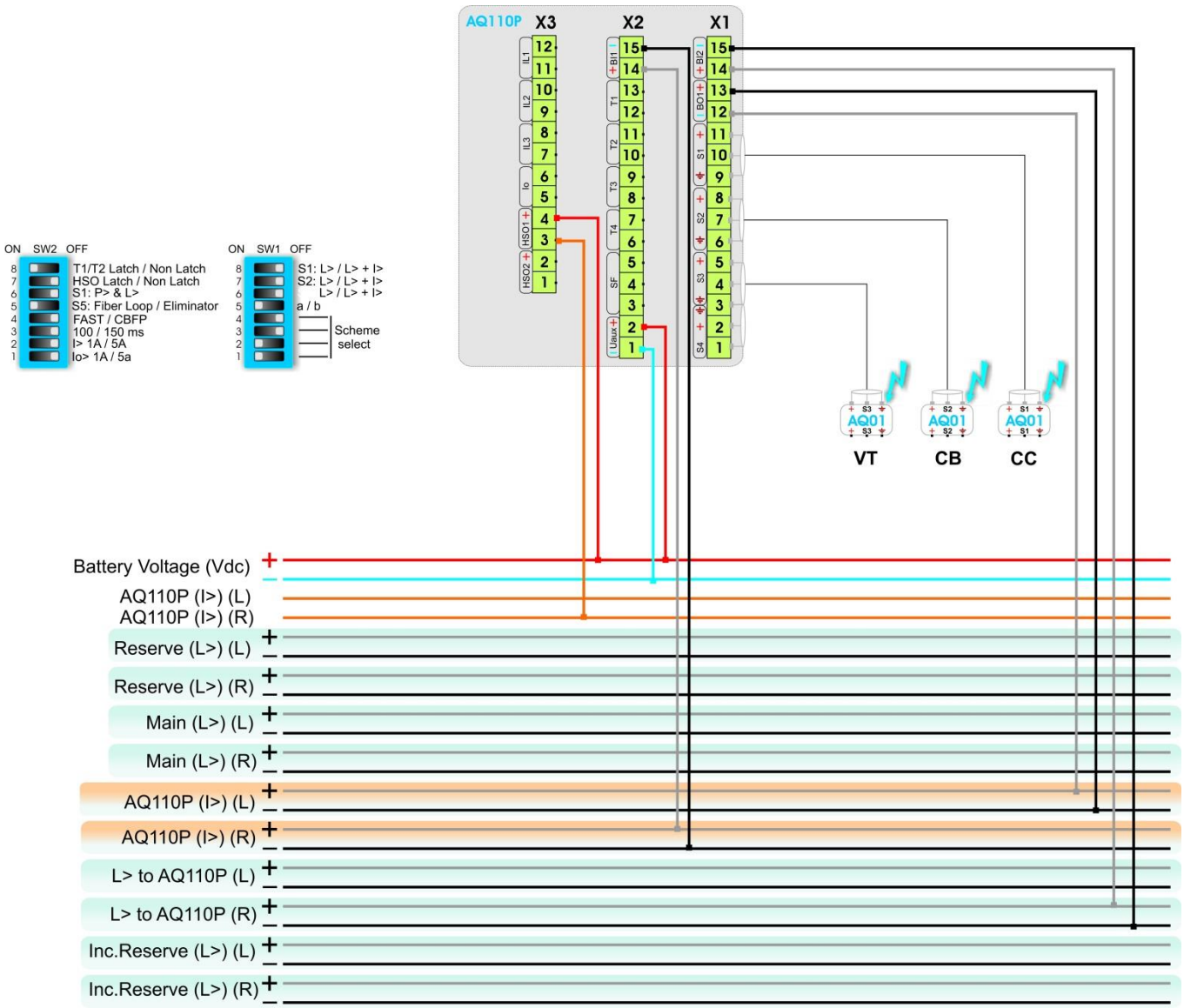

8.2. Two Incomers With Bus Coupler Only (Double Busbar)

8.2.1. Scheme characteristics

Scheme Selection Number	AQ110P – SS3a; AQ101S-SS1, AQ101S-SS2, AQ101S-SS4;
Number of Incoming Feeders	2 x incoming feeders
Number of Outgoing Feeders	M x outgoing feeders
Number of the Circuit Breakers	2 x incomer CBs; M x outgoing CBs
Number of Bus Sections	NO
Number of Bus Couplers	1
Selective for Breaker Position	YES
Selective Trip for Incoming Feeder CBs	YES
Selective Trip for Outgoing Feeder CBs	YES
Selective Trip for Bus Section	YES
Selective Trip for Bus Coupler	YES
Master Trip Function	NO
Units Applied	2 x AQ110P; (Inc. Main unit) M x AQ101S – SS1; (Out. unit) 1 x AQ101S – SS1; (Bus Coupler) 2 x AQ101S – SS2; (Inc. Sub-unit) 1 x AQ101S – SS4;

M: 1 to 20.

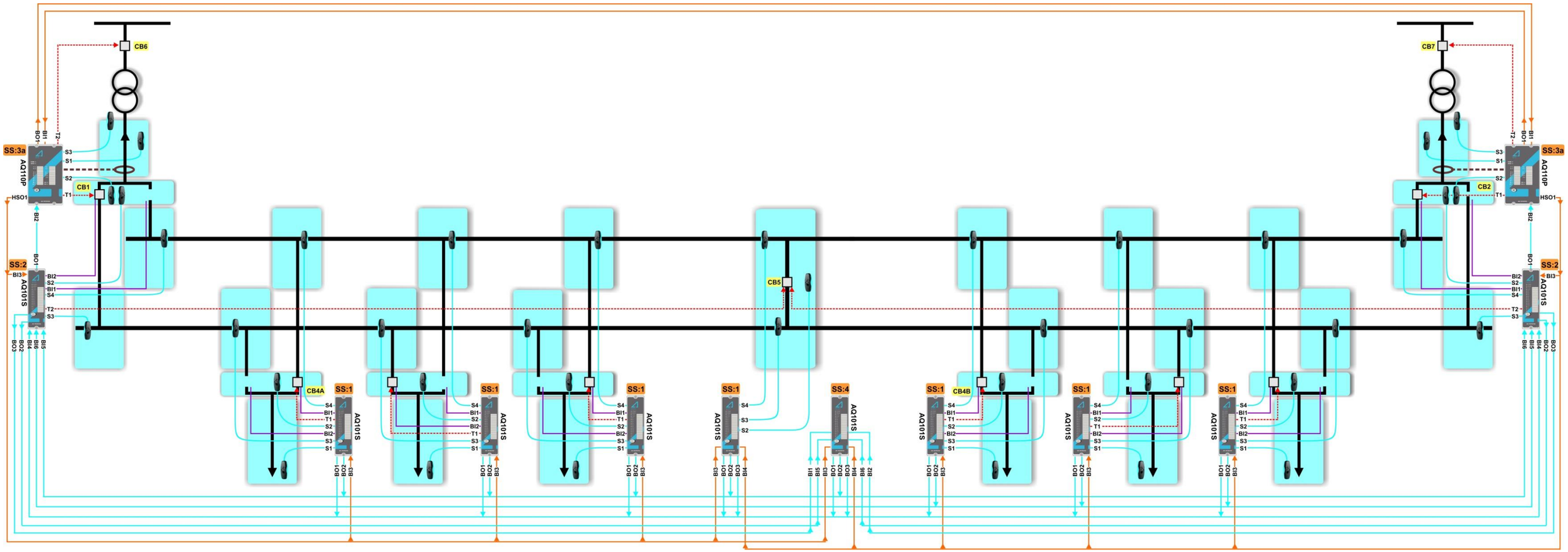

Figure 8-2 Two Incomers with Bus Coupler Only (Double Busbar)

8.2.2. Trip and I/O Description

The following trip and I/O description illustrates the busbar configuration of "Incomer 1 at Reserve Bus and Incomer 2 at Main Bus with Bus Coupler Only". For more busbar configurations for Double Busbar with Bus Coupler Only, please consult your Arcteq representative for a solution.

AQ110P – SS3a (Incomer (L)):

<table>
<tr><th>L></th><th>I> (ext.)</th><th>I> (int.)</th><th>I/O Description</th><th>Trip Description</th></tr>
<tr><td rowspan="2"></td><td></td><td>IL, Io</td><td>✓ Current inputs Phase IL1, IL2, IL3 and E/F Io.
✓ Measuring current for incomer(s).</td><td>✓ Signal outputs: HSO1 (I>) to outgoing units AQ101S-SS2 input BI3, AQ101S-SS1(L) input BI3, AQ101S-SS1(BC) input BI3 and AQ101S-SS1(BS) input BI3.
✓ Signal outputs: BO1 (I>) to outgoing units AQ110P-SS3a(R) input BI1.</td></tr>
<tr><td>BI1</td><td></td><td>✓ Binary input 1.</td><td>✓ Signal inputs: I> from incomer unit AQ110P-SS3a output BO1.</td></tr>
<tr><td rowspan="2">S1</td><td></td><td>IL, Io</td><td rowspan="2">✓ Sensor channel 1.
✓ Monitoring incoming cable compartment.</td><td rowspan="7">✓ Trip criteria: I> + L>.
✓ Trip outputs: T1 (CB1), T2 (CB6), T4 (trip alarm).
✓ Signal inputs: (L>) from incomer sub unit AQ101S-SS2(L) BO1.</td></tr>
<tr><td>BI1</td><td></td></tr>
<tr><td rowspan="2">S2</td><td></td><td>IL, Io</td><td rowspan="2">✓ Sensor channel 2.
✓ Monitoring incoming circuit breaker compartment.</td></tr>
<tr><td>BI1</td><td></td></tr>
<tr><td rowspan="2">S3</td><td></td><td>IL, Io</td><td rowspan="2">✓ Sensor channel 3.
✓ Monitoring voltage transformer.</td></tr>
<tr><td>BI1</td><td></td></tr>
<tr><td rowspan="2">BI2</td><td></td><td>IL, Io</td><td rowspan="2">✓ Binary input 2.</td><td>✓ Trip criteria: I> + L>.
✓ Trip outputs: T1 (CB1), T2 (CBFP to CB6), T4 (trip alarm).
✓ Signal inputs: (L>) from incomer sub unit AQ101S-SS2(L) BO1.</td></tr>
<tr><td>BI1</td><td></td><td>✓ Trip criteria: I> + L>.
✓ Trip outputs: T1 (CB1), T3 (CBF trip alarm), T4 (trip alarm).
✓ Signal inputs: (L>) from incomer sub unit AQ101S-SS2(L) BO1.</td></tr>
</table>

Table 8-25: Trip and I/O Description (Unit) - AQ110P SS3a

Inputs			Outputs						
L>	**I> (ext.)**	**I> (int.)**	**T1**	**T2**	**T3**	**T4**	**HSO1 (I>)**	**HSO2 (MT)**	**BO1**
		IL, Io					√		√
	BI1								
S1		IL, Io	√	√		√	√	√(CBFP)*	√
	BI1								
S2		IL, Io	√	√		√	√	√*	√
	BI1								
S3		IL, Io	√	√		√	√	√(CBFP)*	√
	BI1								
BI2		IL, Io	√	√(CBFP)		√	√	√*	√
	BI1		√		√(CBFP)	√	√	√*	√

Table 8-26: Trip and I/O logic (Unit) - AQ110P SS3a

Note: * signals are not in use for this application.

L>	I>	CB1	CB2	CB3(N/A)	CB4A	CB4B	CB5	CB6	CB7
S1	√	√						√	
S2	√	√						√	
S3	√	√						√	

Table 8-27: Trip logic (Application) - AQ110P SS3a

AQ101S – SS2 (INCOMER SUB-UNIT (L)):

BI1 of AQ101S-SS2 indicates that the incomer CB is connected to main busbar. BI2 of AQ101S-SS2 indicates that the incomer CB is connected to reserve busbar.

L>	I> (ext.)	I/O Description	Trip Description
	BI3	✓ Binary Input 3.	✓ Signal inputs: I> from incomer unit AQ110P-SS3a(L) output HSO1.
S2	BI3	✓ Sensor Channel 2. ✓ Monitoring incomer CB.	✓ Trip criteria: I> + L>. ✓ Trip outputs: T1 (not in use), T2 (CB5), T3 (trip alarm). ✓ Signal outputs: BO2 (L>) to AQ101S-SS4 input BI5.
S3	BI3	✓ Sensor Channel 3. ✓ Monitoring reserve busbar at left coupler side.	✓ Trip criteria: I> + L>. ✓ Trip outputs: T2 (CB5), T3 (trip alarm). ✓ Signal Output: BO1(L>) to AQ110P-SS3a(L) input BI2. BO2(L>) to AQ101S-SS4 input BI5.
S4	BI3	✓ Sensor Channel 4. ✓ Monitoring main busbar at left section side.	✓ Trip criteria: I> + L>. ✓ Trip outputs: T1 (not in use), T2 (CB5), T3 (trip alarm). ✓ Signal outputs: BO3(L>) to AQ101S-SS4 input BI1.
BI4	BI3	✓ Binary Input 4. ✓ Arc fault at main busbar at left section side.	✓ Trip criteria: I> + L>. ✓ Trip outputs: T1 (not in use), T2 (CB5), T3 (trip alarm).
BI5	BI3	✓ Binary Input 5. ✓ Arc fault at reserve busbar at left coupler side.	✓ Trip criteria: I> + L>. ✓ Trip outputs: T2 (CB5), T3 (trip alarm). ✓ Signal outputs: BO1 (L>) to AQ110P-SS3a(L) input BI2.
BI6	BI3	✓ Binary Input 6. ✓ Arc fault at reserve busbar at right coupler side.	✓ Trip criteria: I> + L>. ✓ Trip outputs: T2 (CB5), T3 (trip alarm). ✓ Signal outputs: BO1 (L>) to AQ110P-SS3a(L) input BI2.

Table 8-28: Trip and I/O Description (Unit) – AQ101S-SS2

Inputs		Outputs					
L>	I> (ext.)	T1	T2	T3	BO1	BO2	BO3
	BI3						
S2	BI3	√*	√	√		√	
S3	BI3		√	√	√	√	
S4	BI3	√*	√	√			√
BI4	BI3	√*	√	√			
BI5	BI3		√	√	√		
BI6	BI3		√	√	√		

Table 8-29: Trip and I/O logic (Unit) - AQ101S-SS2

Note: * Trip contact is not in use.

L>	I>	CB1	CB2	CB3(N/A)	CB4A	CB4B	CB5	CB6	CB7
S2	√	√	√				√		
S3	√	√					√		
S4	√		√				√		

Table 8-30: Trip logic (Application) - AQ101S-SS2

AQ101S – SS1 (OUTGOING UNIT (L)):

BI1 of AQ101S-SS1(L) indicates that the incomer CB is connected to main busbar. BI2 of AQ101S-SS2 indicates that the incomer CB is connected to reserve busbar.

L>	I> (ext.)	I/O Description	Trip Description
	BI3	✓ Binary Input 3.	✓ Signal inputs: I> from incomer unit AQ110P-SS3a(L) output HSO1.
S1	BI3	✓ Sensor Channel 1. ✓ Monitoring outgoing cable compartment.	✓ Trip criteria: I> + L>. ✓ Trip outputs: T1 (CB4A), T3 (trip alarm).
S2	BI3	✓ Sensor Channel 2. ✓ Monitoring incomer CB.	✓ Trip criteria: I> + L>. ✓ Trip outputs: T2 (not in use), T3 (trip alarm). ✓ Signal outputs: BO1 (L>) to AQ101S-SS2 input BI4; BO2 (L>) to AQ101S-SS2 input BI5, to AQ101S-SS3 input BI6; BO3 (L>) not in use.
S3	BI3	✓ Sensor Channel 3. ✓ Monitoring reserve busbar at left coupler side.	✓ Trip criteria: I> + L>. ✓ Trip outputs: T2 (not in use), T3 (trip alarm). ✓ Signal outputs: BO2 (L>) to AQ101S-SS2 input BI5, to AQ101S-SS3 input BI6.
S4	BI3	✓ Sensor Channel 4. ✓ Monitoring main busbar at left section side.	✓ Trip criteria: I> + L>. ✓ Trip outputs: T2 (not in use), T3 (trip alarm). ✓ Signal outputs: BO1 (L>) to AQ101S-SS2 input BI4; BO3 (L>) not in use.

Table 8-31: Trip and I/O Description (Unit) – AQ101S-SS1(L)

Inputs		Outputs					
L>	I> (ext.)	T1	T2	T3	BO1	BO2	BO3
	BI3						
S1	BI3	√	√*	√			
S2	BI3		√*	√	√	√	√
S3	BI3		√*	√		√	
S4	BI3		√*	√	√		√

Table 8-32: Trip and I/O logic (Unit) - AQ101S-SS1(L)

Note: * Trip contact is not in use.

L>	I>	CB1	CB2	CB3(N/A)	CB4A	CB4B	CB5	CB6	CB7
S1	√				√				
S2	√	√	√				√		
S3	√		√				√		
S4	√	√					√		

Table 8-33: Trip logic (Application) - AQ101S-SS1(L)

AQ101S – SS1 (BUS COUPLER):

L>	I> (ext.)	I/O Description	Trip Description
	BI3	✓ Binary Input 3.	✓ Signal inputs: I> from incomer unit AQ110P-SS3a(L) output HSO1.
S2	BI3	✓ Sensor Channel 2. ✓ Monitoring bus coupler breaker compartment.	✓ Trip criteria: I> + L>. ✓ Trip outputs: T2 (not in use), T3 (trip alarm). ✓ Signal outputs: BO1 (L>) to AQ101S-SS2 input BI4; BO2 (L>) to AQ101S-SS2 input BI5, to AQ101S-SS3 input BI6; BO3 (L>) not in use.
S3	BI3	✓ Sensor Channel 3. ✓ Monitoring reserve busbar at bus coupler compartment.	✓ Trip criteria: I> + L>. ✓ Trip outputs: T2 (not in use), T3 (trip alarm). ✓ Signal outputs: BO2 (L>) to AQ101S-SS2 input BI5, to AQ101S-SS3 input BI6.
S4	BI3	✓ Sensor Channel 4. ✓ Monitoring main busbar at bus coupler compartment.	✓ Trip criteria: I> + L>. ✓ Trip outputs: T2 (not in use), T3 (trip alarm). ✓ Signal outputs: BO1 (L>) to AQ101S-SS2 input BI4; BO3 (L>) not in use.

Table 8-34: Trip and I/O Description (Unit) – AQ101S-SS1(BC)

Inputs		Outputs					
L>	I> (ext.)	T1	T2	T3	BO1	BO2	BO3
	BI3						
S2	BI3		√*	√	√	√	√
S3	BI3		√*	√		√	
S4	BI3		√*	√	√		√

Table 8-35: Trip and I/O logic (Unit) - AQ101S-SS1(BC)

Note: * Trip contact is not in use.

L>	I>	CB1	CB2	CB3(N/A)	CB4A	CB4B	CB5	CB6	CB7
S2	√	√	√				√		
S3	√		√				√		
S4	√	√					√		

Table 8-36: Trip logic (Application) - AQ101S-SS1(BC)

AQ101S – SS4 (BUS SECTION):

L>	I> (ext.)	I/O Description	Trip Description
	BI3 /BI4	✓ Binary Input 3/4.	✓ Signal inputs: BI3(I>) from incomer unit AQ110P-SS3a(L) output HSO1. BI4(I>) from incomer unit AQ110P-SS3a(R) output HSO1.
BI1	BI3 /BI4	✓ Binary Input 1.	✓ Trip criteria: I> + L>. ✓ Signal outputs: BO3 (L>) to AQ101S-SS2(L) input BI4, to AQ101S-SS2(L) input BI4.
BI2	BI3 /BI4	✓ Binary Input 2.	✓ Trip criteria: I> + L>. ✓ Signal outputs: BO3 (L>) to AQ101S-SS2(L) input BI4, to AQ101S-SS2(L) input BI4.
BI5	BI3 /BI4	✓ Binary Input 5.	✓ Trip criteria: I> + L>. ✓ Signal outputs: BO2 (L>) to AQ101S-SS2(R) input BI6, to AQ101S-SS2(L) input BI5..
BI6	BI3 /BI4	✓ Binary Input 6.	✓ Trip criteria: I> + L>. ✓ Signal outputs: BO2 (L>) to AQ101S-SS2(R) input BI6, to AQ101S-SS2(L) input BI5.

Table 8-37: Trip and I/O Description (Unit) – AQ101S-SS4(BS)

Inputs		Outputs					
L>	I> (ext.)	T1	T2	T3	BO1	BO2	BO3
	BI3/4						
BI1	BI3/4						√
BI2	BI3/4						√
BI5	BI3/4					√	
BI6	BI3/4					√	

Table 8-38: Trip and I/O logic (Unit) - AQ101S-SS4(BS)

L>	I>	CB1	CB2	CB3(N/A)	CB4A	CB4B	CB5	CB6	CB7
BI1	√		√				√		
BI2	√		√				√		
BI5	√	√					√		
BI6	√	√					√		

Table 8-39: Trip logic (Application) - AQ101S-SS4(BS)

AQ101S – SS1 (OUTGOING UNIT (R)):

BI1 of AQ101S-SS1(R) indicates that the incomer CB is connected to main busbar. BI2 of AQ101S-SS1(R) indicates that the incomer CB is connected to reserve busbar.

L>	I> (ext.)	I/O Description	Trip Description
	BI3	✓ Binary Input 3.	✓ Signal inputs: I> from incomer unit AQ110P-SS3a(L) output HSO1.
S1	BI3	✓ Sensor Channel 1. ✓ Monitoring outgoing cable compartment.	✓ Trip criteria: I> + L>. ✓ Trip outputs: T1 (CB4B), T3 (trip alarm).
S2	BI3	✓ Sensor Channel 2. ✓ Monitoring incomer CB.	✓ Trip criteria: I> + L>. ✓ Trip outputs: T2 (not in use), T3 (trip alarm). ✓ Signal outputs: BO1 (L>) to AQ101S-SS3 input BI4; BO2 (L>) to AQ101S-SS3 input BI5, to AQ101S-SS2 input BI6; BO3 (L>) not in use.
S3	BI3	✓ Sensor Channel 3. ✓ Monitoring reserve busbar at left coupler side.	✓ Trip criteria: I> + L>. ✓ Trip outputs: T2 (not in use), T3 (trip alarm). ✓ Signal outputs: BO2 (L>) to AQ101S-SS3 input BI5, to AQ101S-SS2 input BI6.
S4	BI3	✓ Sensor Channel 4. ✓ Monitoring main busbar at left section side.	✓ Trip criteria: I> + L>. ✓ Trip outputs: T2 (not in use), T3 (trip alarm). ✓ Signal outputs: BO1 (L>) to AQ101S-SS3 input BI4; BO3 (L>) not in use.

Table 8-40: Trip and I/O Description (Unit) – AQ101S-SS1(R)

Inputs		Outputs					
L>	I> (ext.)	T1	T2	T3	BO1	BO2	BO3
	BI3						
S1	BI3	√	√*	√			
S2	BI3		√*	√	√	√	√
S3	BI3		√*	√		√	
S4	BI3		√*	√	√		√

Table 8-41: Trip and I/O Description (Unit) – AQ101S-SS1(R)

Note: * Trip contact is not in use.

L>	I>	CB1	CB2	CB3(N/A)	CB4A	CB4B	CB5	CB6	CB7
S1	√					√			
S2	√	√	√				√		
S3	√		√				√		
S4	√	√					√		

Table 8-42: Trip logic (Application) - AQ101S-SS1(R)

AQ101S – SS2 (INCOMER SUB-UNIT (R)):

BI1 of AQ101S-SS2(R) indicates that the incomer CB is connected to main busbar. BI2 of AQ101S-SS2(R) indicates that the incomer CB is connected to reserve busbar.

L>	I> (ext.)	I/O Description	Trip Description
	BI3	✓ Binary Input 3.	✓ Signal inputs: I> from incomer unit AQ110P-SS3a(R) output HSO1.
S2	BI3	✓ Sensor Channel 2. ✓ Monitoring incomer CB.	✓ Trip criteria: I> + L>. ✓ Trip outputs: T1 (CB3), T2 (CB5), T3 (trip alarm). ✓ Signal outputs: BO1 (L>) to AQ110P-SS3a(R) input BI2. BO2 (L>) to AQ101S-SS4 input BI6.
S3	BI3	✓ Sensor Channel 3. ✓ Monitoring reserve busbar at left coupler side.	✓ Trip criteria: I> + L>. ✓ Trip outputs: T2 (CB5), T3 (trip alarm). ✓ Signal outputs: BO1 (L>) to AQ110P-SS3a(R) input BI2.
S4	BI3	✓ Sensor Channel 4. ✓ Monitoring main busbar at left section side.	✓ Trip criteria: I> + L>. ✓ Trip outputs: T1 (CB3), T3 (trip alarm). ✓ Signal outputs: BO1 (L>) to AQ110P-SS3a input BI2. BO3 (L>) to AQ101S-SS4 input BI2.
BI4	BI3	✓ Binary Input 4. ✓ Arc fault at main busbar at left section side.	✓ Trip criteria: I> + L>. ✓ Trip outputs: T1 (CB3), T3 (trip alarm). ✓ Signal outputs: BO1 (L>) to AQ110P-SS3a input BI2.
BI5	BI3	✓ Binary Input 5. ✓ Arc fault at reserve busbar at left coupler side.	✓ Trip criteria: I> + L>. ✓ Trip outputs: T2 (CB5), T3 (trip alarm).
BI6	BI3	✓ Binary Input 6. ✓ Arc fault at reserve busbar at right coupler side.	✓ Trip criteria: I> + L>. ✓ Trip outputs: T2 (CB5), T3 (trip alarm).

Table 8-43: Trip and I/O Description (Unit) – AQ101S-SS2(R)

Inputs		Outputs					
L>	I> (ext.)	T1	T2	T3	BO1	BO2	BO3
	BI3						
S2	BI3	√*	√	√	√	√	
S3	BI3		√	√		√	
S4	BI3	√*		√	√		√
BI4	BI3	√*		√	√		
BI5	BI3		√	√			
BI6	BI3		√	√			

Table 8-44: Trip and I/O logic (Unit) - AQ101S-SS2(R)

Note: * Trip contact is not in use for this application.

L>	I>	CB1	CB2	CB3(N/A)	CB4A	CB4B	CB5	CB6	CB7
S2	√	√	√				√		
S3	√	√					√		
S4	√		√				√		

Table 8-45: Trip logic (Application) - AQ101S-SS2(R)

AQ110P – SS3A (INCOMER (R)):

L>	I> (ext.)	I> (int.)	I/O Description	Trip Description
		IL, Io	✓ Current inputs Phase IL1, IL2, IL3 and E/F Io. ✓ Measuring current for incomer(s).	✓ Signal outputs: HSO1 (I>) to outgoing units AQ101S-SS2 input BI3, AQ101S-SS1(R) input BI3, AQ101S-SS1(BC) input BI3 and AQ101S-SS1(BS) input BI4. ✓ Signal outputs: BO1 (I>) to outgoing units AQ110P-SS3a(L) input BI1.
	BI1		✓ Binary input 1.	✓ Signal inputs: I> from incomer unit AQ110P-SS3a(L) output BO1.
S1		IL, Io	✓ Sensor channel 1. ✓ Monitoring incoming cable compartment.	✓ Trip criteria: I> + L>. ✓ Trip outputs: T1 (CB2), T2 (CB7), T4 (trip alarm). ✓ Signal inputs: (L>) from incomer sub unit AQ101S-SS2(R) BO1.
	BI1			
S2		IL, Io	✓ Sensor channel 2. ✓ Monitoring incoming circuit breaker compartment.	
	BI1			
S3		IL, Io	✓ Sensor channel 3. ✓ Monitoring voltage transformer.	
	BI1			
BI2		IL, Io	✓ Binary input 2.	✓ Trip criteria: I> + L>. ✓ Trip outputs: T1 (CB2), T2 (CBFP to CB7), T4 (trip alarm). ✓ Signal inputs: (L>) from incomer sub unit AQ101S-SS2(R) BO1.
	BI1			✓ Trip criteria: I> + L>. ✓ Trip outputs: T1 (CB2), T3 (CBF trip alarm), T4 (trip alarm). ✓ Signal inputs: (L>) from incomer sub unit AQ101S-SS2(R) BO1.

Table 8-46: Trip and I/O Description (Unit) - AQ110P SS3a(R)

Inputs			Outputs						
L>	**I> (ext.)**	**I> (int.)**	**T1**	**T2**	**T3**	**T4**	**HSO1 (I>)**	**HSO2 (MT)**	**BO1**
		IL, Io					√		√
	BI1								
S1		IL, Io	√	√		√	√	√(CBFP)*	√
	BI1								
S2		IL, Io	√	√		√	√	√*	√
	BI1								
S3		IL, Io	√	√		√	√	√(CBFP)*	√
	BI1								
BI2		IL, Io	√	√(CBFP)		√	√	√*	√
	BI1		√		√(CBFP)	√	√	√*	√

Table 8-47: Trip and I/O logic (Unit) - AQ110P SS3a(R)

Note: * signals are not in use for this application.

L>	I>	CB1	CB2	CB3	CB4A	CB4B	CB5	CB6	CB7
S1	√		√						√
S2	√		√						√
S3	√		√						√

Table 8-48: Trip logic (Application) - AQ110P SS3a(R)

8.2.3. CONNECTIONS

AQ110P – SS3A (INCOMER (L)):

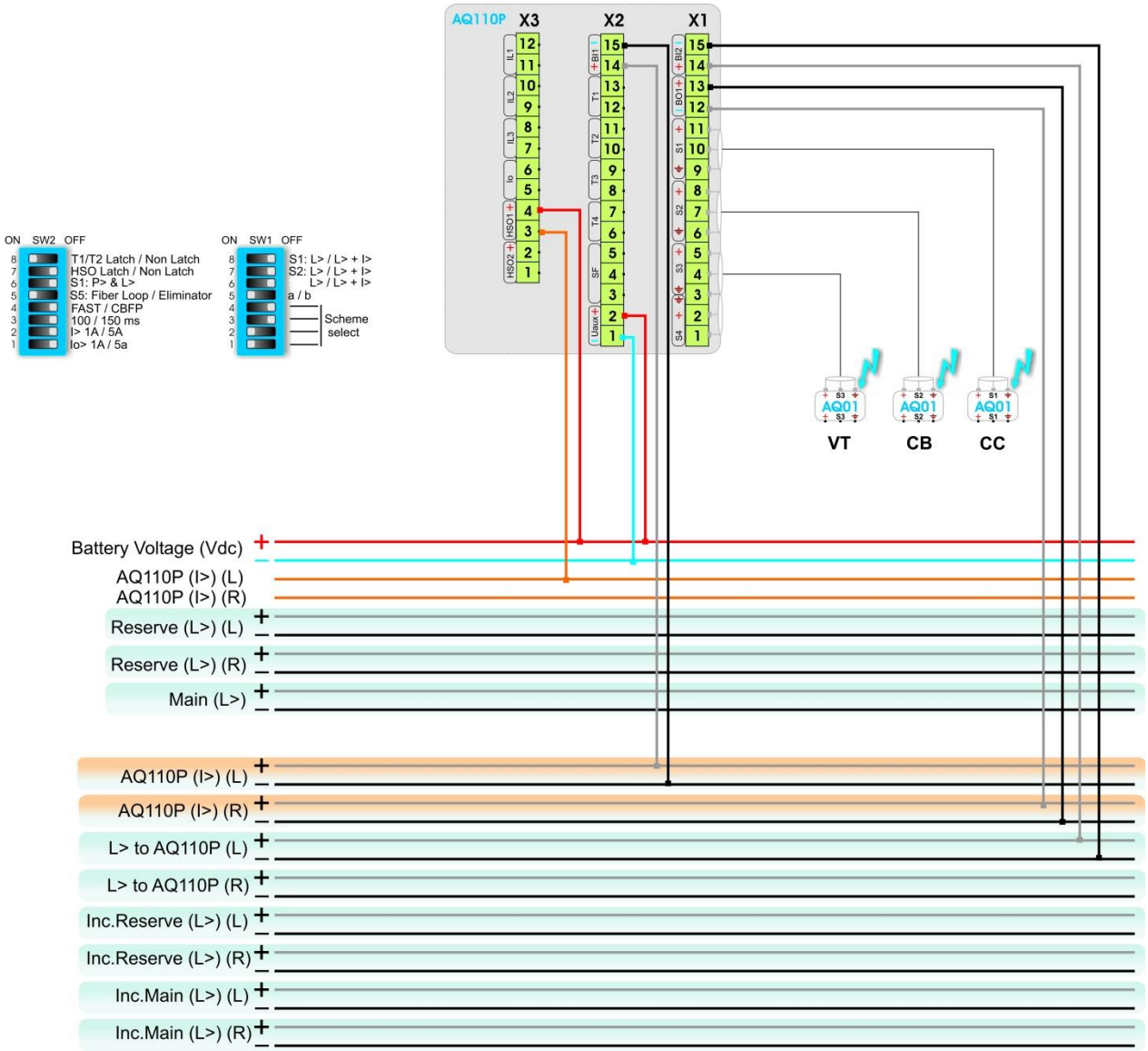

AQ101S – SS2 (INCOMER SUB-UNIT (L)):

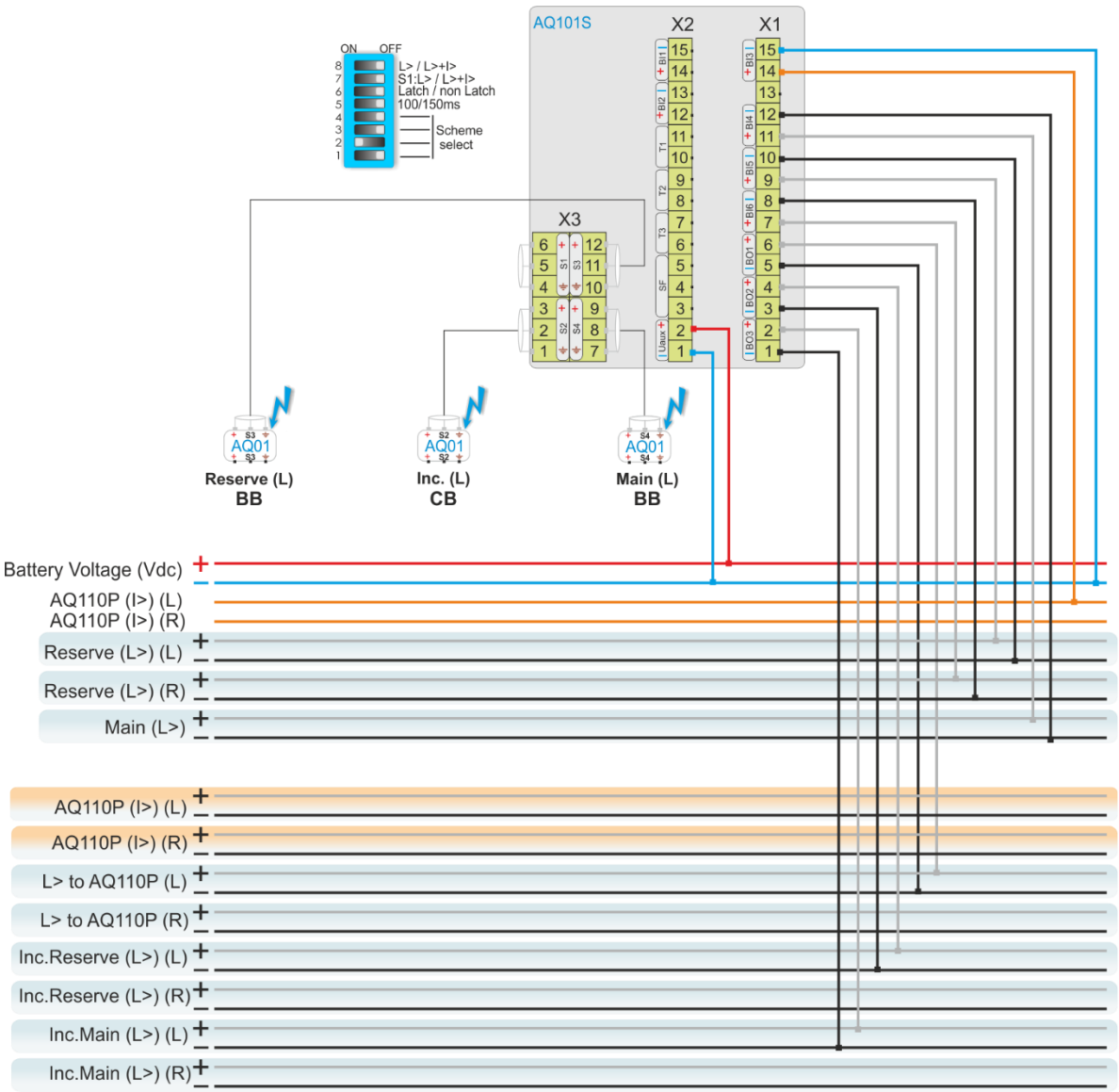

AQ101S – SS1 (Outgoing unit (L)):

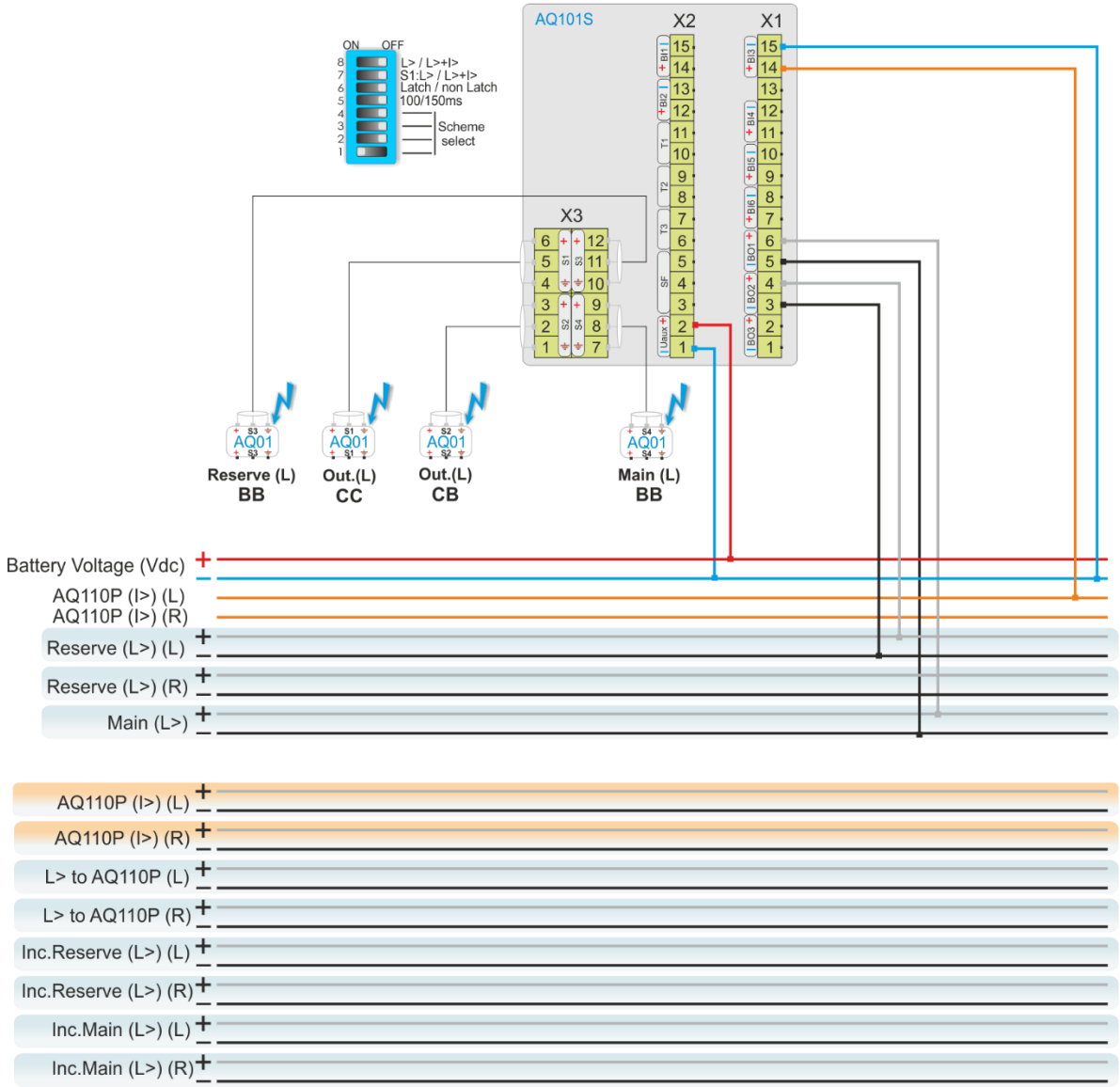

AQ101S – SS1 (Bus Coupler):

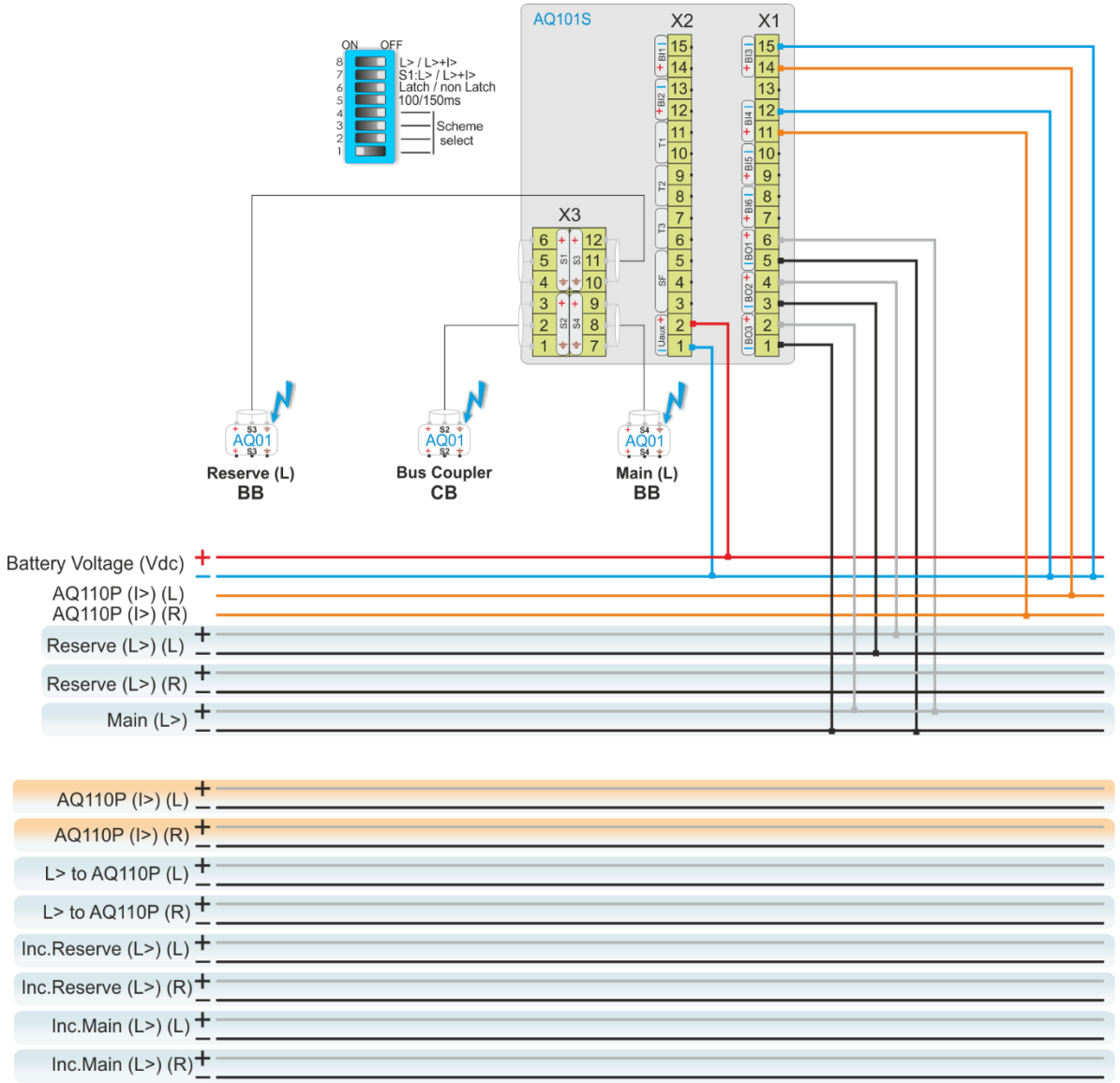

AQ101S – SS4:

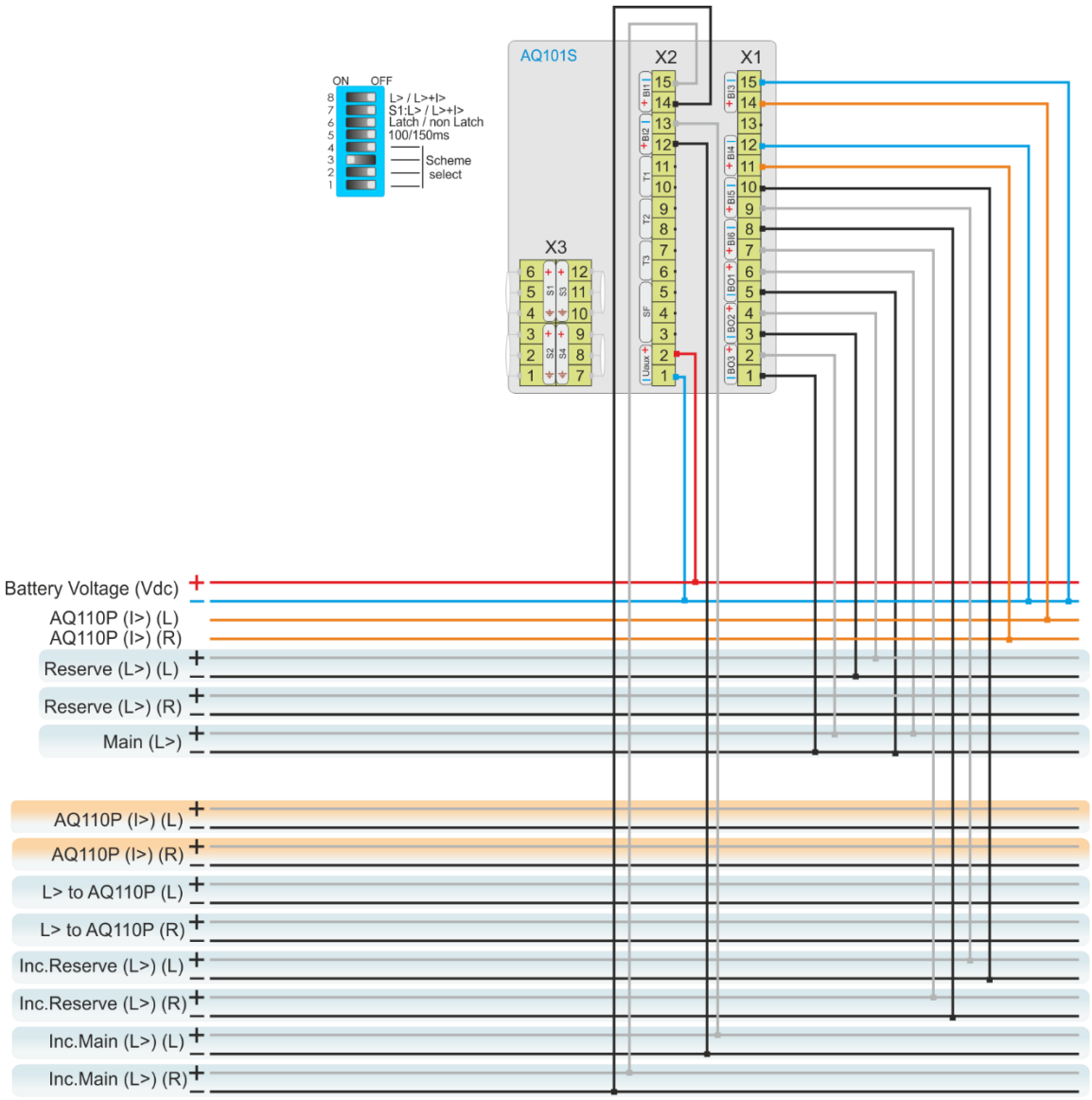
AQ101S
X2
X1
X3
ON
OFF
L> / L>+I>
S1:L> / L>+I>
Latch / non Latch
100/150ms
Scheme
select
Battery Voltage (Vdc)
AQ110P (I>) (L)
AQ110P (I>) (R)
Reserve (L>) (L)
Reserve (L>) (R)
Main (L>)
AQ110P (I>) (L)
AQ110P (I>) (R)
L> to AQ110P (L)
L> to AQ110P (R)
Inc.Reserve (L>) (L)
Inc.Reserve (L>) (R)
Inc.Main (L>) (L)
Inc.Main (L>) (R)

AQ101S – SS1 (Outgoing unit (R)):

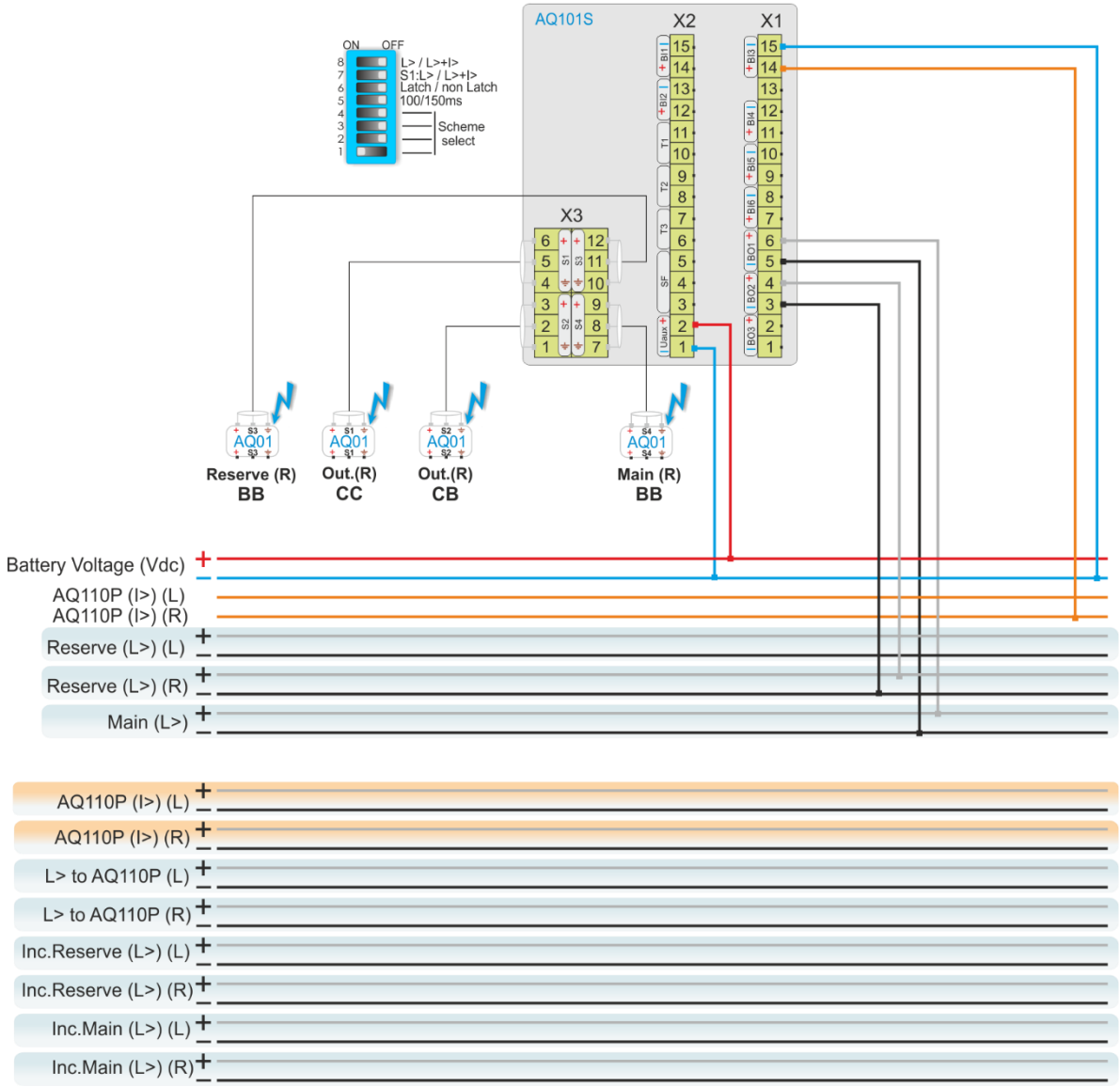

AQ101S – SS2 (INCOMER SUB-UNIT (R)):

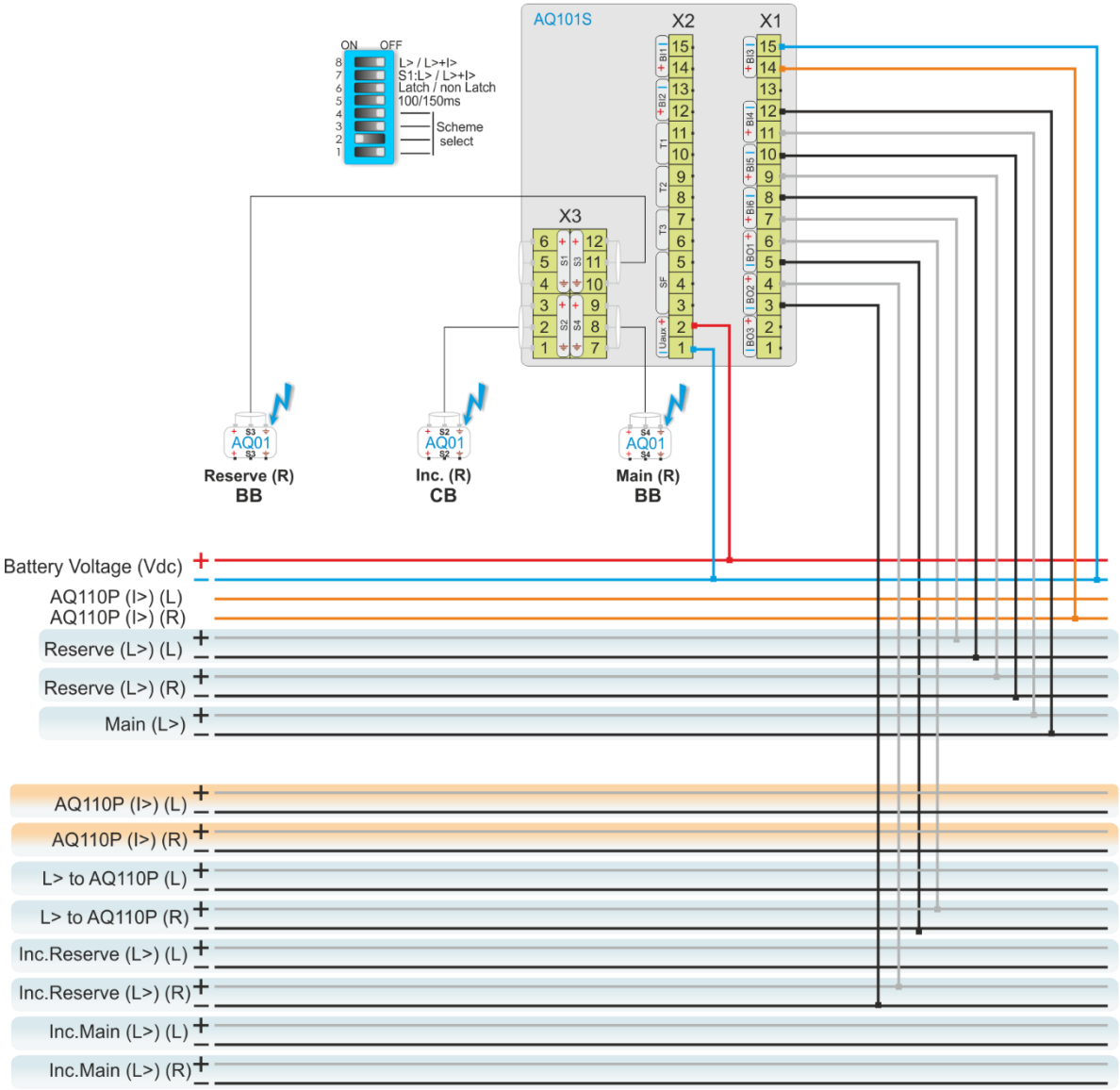
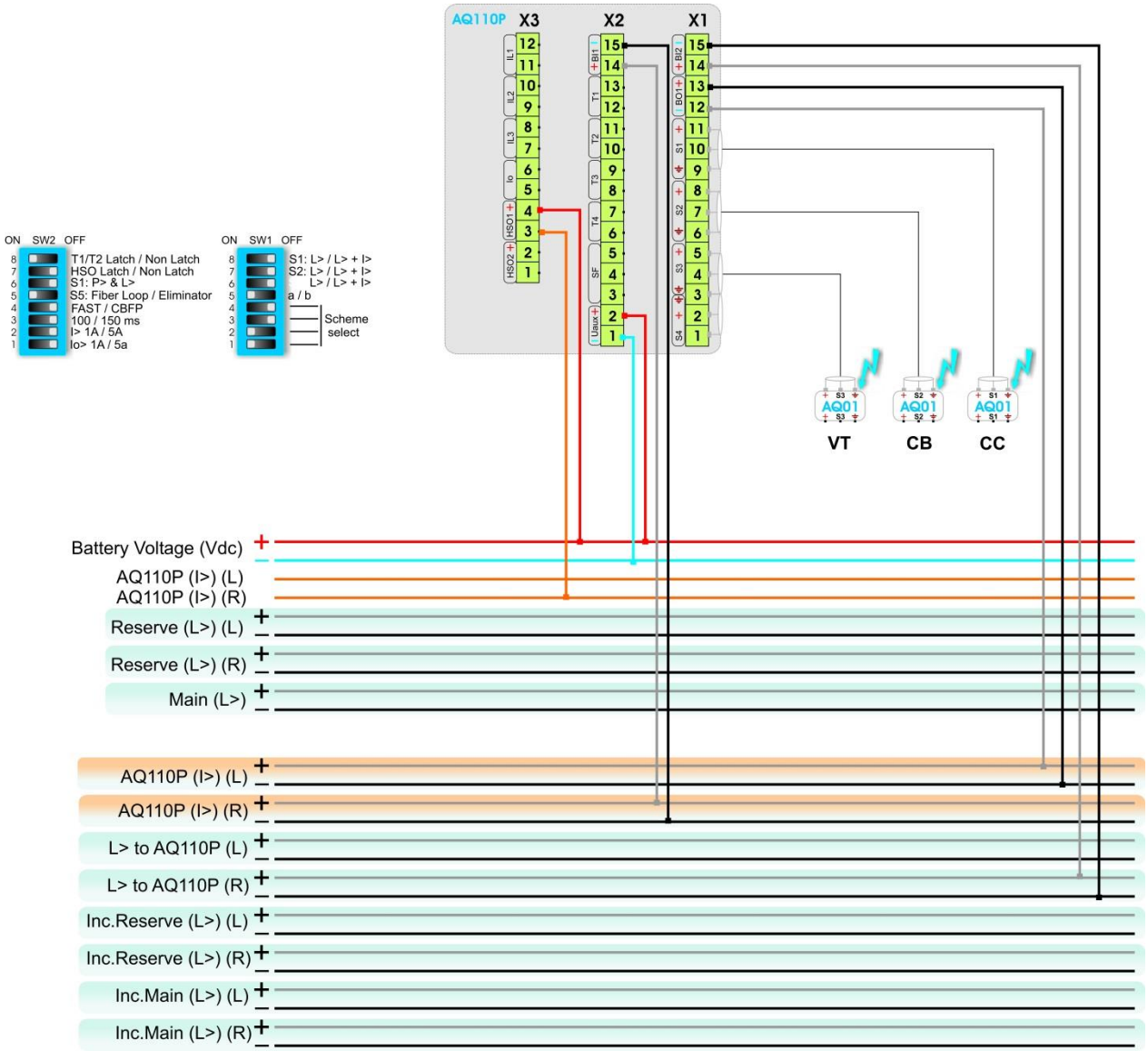
AQ110P – SS3A (INCOMER (R)):